LEAR SIEGLER, INC.

ADM-31
Data Display Terminal Maintenance Manual

ADM-31
DATA DISPLAY TERMINAL
MAINTENANCE MANUAL

LEAR SIEGLER INC.
DATA PRODUCTS DIVISION
714 NORTH BROOKHURST STREET, ANAHEIM, CALIFORNIA 92803

DP-310

©1979 LEAR SIEGLER, INC.

April 1979

TABLE OF CONTENTS

SECTION			PAGE
1	GENERAL DESCRIPTION		
1.1	INTRODUCTION		1-1
1.2	PURPOSE AND USE		1-1
1.3	OPERATIONAL DESCRIPTION		1-2
	1.3.1	Switching Power Supply	1-2
	1.3.2	Keyboard	1-2
	1.3.3	Control Section (CPU)	1-2
	1.3.4	Video Logic and Control	1-4
	1.3.5	External Interface	1-4
	1.3.6	System Configuration Switches	1-4
1.4	PHYSICAL DESCRIPTION		1-5
1.5	SPECIFICATIONS		1-6
	1.5.1	Transmission Modes	1-6
	1.5.2	Character Format	1-7
1.6	OPTIONAL FEATURES		1-11
	1.6.1	Serial Printer Interface	1-11
	1.6.2	Polling Interface (Future)	1-11
	1.6.3	Daisychain Devices Interface	1-11
	1.6.4	Word Structure	1-11
	1.6.5	Configuration Control	1-11
	1.6.6	Composite Video	1-15
	1.6.7	Answer Back Option (Future)	1-15
	1.6.8	230-VAC Input Power	1-16
1.7	RELATED DOCUMENT		1-16
2	INSTALLATION		
2.1	INTRODUCTION		2-1
2.2	SAFETY REQUIREMENTS		2-1
2.3	SITE REQUIREMENTS		2-1
2.4	UNPACKING AND INITIAL INSPECTION		2-2
2.5	INITIAL PREPARATION		2-2
	2.5.1	Line Voltage Selection	2-2
	2.5.2	Configuration Control Switch Settings	2-2
2.6	INTERFACE INFORMATION		2-3
	2.6.1	RS-232-C MODEM Port Interface	2-3

TABLE OF CONTENTS (continued)

SECTION			PAGE
	2.6.2	RS-232-C AUXILIARY Port Interface	2-3
	2.6.3	RS-232-C EXTENSION Port Interface	2-3
2.7	INSTALLING THE ADM-31		2-9
2.8	CARE OF THE ADM-31 TERMINAL DISPLAY		2-10
	2.8.1	Cleaning	2-10
	2.8.2	Inspection	2-10
3	OPERATING INSTRUCTIONS		
3.1	INTRODUCTION		3-1
3.2	KEYBOARD FUNCTIONS		3-1
	3.2.1	Terminal Control Keys	3-3
	3.2.2	Alphanumeric Keys	3-3
	3.2.3	Special Character Keys	3-6
	3.2.4	Operational Control Keys	3-6
3.3	CURSOR CONTROL OPERATIONS		3-7
3.4	DATA EDITING CONTROL OPERATIONS		3-8
	3.4.1	Editing Examples	3-10
3.5	DATA TRANSMISSION CONTROL OPERATIONS		3-13
	3.5.1	Transmission (Baud) Rates	3-13
	3.5.2	Block Mode Transmission	3-14
	3.5.3	Example of Block Mode Transmission	3-14
	3.5.4	Conversation Mode Transmission	3-15
	3.5.5	Example of Conversion Mode Transmission	3-16
	3.5.6	Print Mode Transmission	3-16
	3.5.7	Buffered Print Mode Transmission	3-19
	3.5.8	Polling Mode Transmission (Future)	3-19
3.6	PROGRAM MODE		3-19
3.7	PROTECTED FIELDS/CHARACTERS		3-19
	3.7.1	Designated Protected Fields	3-20

TABLE OF CONTENTS (continued)

SECTION			PAGE
	3.7.2	Selected Protected Fields.....	3-20
	3.7.3	Write Protect Mode.....	3-21
	3.7.4	Protect Mode.....	3-21
3.8	REAR PANEL CONTROLS.....		3-21
3.9	TURN-ON AND TURN-OFF PROCEDURES.....		3-21
3.10	PROGRAMMING CONSIDERATIONS.....		3-24
	3.10.1	CTRL Key Operations.....	3-24
	3.10.2	ESC Key Operations.....	3-35
	3.10.3	FUNCTION Key Operations.....	3-35
	3.10.4	Personality Control Operations.	3-38
	3.10.5	Terminal Control Operations....	3-40
	3.10.6	Cursor Control Operations.....	3-40
	3.10.7	Format Control Operations.....	3-41
	3.10.8	Data Editing Control Operations	3-43
	3.10.9	Data Transmission Control Operations.....	3-44
	3.10.10	Video Attribute Control	3-45/46
4	THEORY OF OPERATION		
4.1	GENERAL DESCRIPTION.....		4-1
4.2	FUNCTIONAL DESCRIPTION.....		4-1
4.3	THEORY OF OPERATION.....		4-2
	4.3.1	Introduction.....	4-2
	4.3.2	System Functional Description..	4-2
4.4	CPU SECTION DETAILED BLOCK DESCRIPTION..		4-4
	4.4.1	CPU Section Overview.....	4-4
	4.4.2	M6800 MPU 13C (Schematic P2)...	4-6
	4.4.3	Address Buffers 12E, 13E, 14E (Schematic P2).....	4-8
	4.4.4	Address Decoders 13F, 14J (Schematic P2).....	4-9
	4.4.5	Two Phase (2Ø) Clock (Schematic P2 and P3).....	4-11
4.5	EXTERNAL INTERFACE SECTION DETAILED BLOCK DESCRIPTION.....		4-11
	4.5.1	External Interface Section Overview.....	4-13
	4.5.2	Buade Rate Clock 2B and BAUD RATE Switches (Schematic P8)...	4-13

TABLE OF CONTENTS (continued)

SECTION			PAGE
	4.5.3	MODEM/EXTENSION Ports ACIA (Schematic P8)	4-14
	4.5.4	Modem ACIA Internal Registers	4-17
	4.5.5	Printer Port ACIA 13B (Schematic P11)	4-22
4.6		MEMORY SECTION DETAILED BLOCK DESCRIPTION	4-23
	4.6.1	Memory Section Overview	4-23
	4.6.2	2Kx8 ROMS 9F Thru 12F (Schematic P7)	4-23
	4.6.3	Personality ROM 14H (Schematic P7)	4-25
	4.6.4	1Kx1 RAMS 8H Thru 13H (Schematic P7)	4-25
	4.6.5	Data Buffers 9J, 9K, 14H, 16F (Schematic P7)	4-26
4.7		KEYBOARD SECTION DETAILED BLOCK DESCRIPTION	4-26
	4.7.1	Keyboard Section Overview	4-26
	4.7.2	Peripheral Interface Adapter (PIA) 5J (Schematic P9)	4-27
	4.7.3	4-to-16 Decoder 3K (Schematic P10)	4-30
	4.7.4	8-to-1 Multiplexer 2K (Schematic P10)	4-30
	4.7.5	Keyboard Matrix (Schematic P10)	4-30
4.8		VIDEO SECTION DETAILED BLOCK DESCRIPTION	4-30
	4.8.1	Video Section Overview	4-30
	4.8.2	CRT Controller 8B (Schematic P6)	4-32
	4.8.3	Row/Column To Linear Converter (Schematic P6)	4-33
	4.8.4	Address Selection MUX 8E, 9E, 10F (Schematic P3)	4-33
	4.8.5	Row/Column Address Multiplexer 6E, 7E (Schematic P3)	4-33
	4.8.6	Video Refresh Data RAM 4F-7F, 4H-7H (Schematic P4)	4-33
	4.8.7	Refresh Memory Data Buffer 2H, 3H and Latch 7J, 7K (Schematic P5)	4-34

TABLE OF CONTENTS (continued)

SECTION			PAGE
	4.8.8	Character Generator 1F (Schematic P5)	4-34
	4.8.9	Video Logic (Schematic P6)	4-35
4.9	SYSTEM CONFIGURATION SWITCH SECTION DETAILED BLOCK DESCRIPTION		4-35
	4.9.1	Switch Bank 1 K10 and Buffer 10J, 10K (Schematic P8)	4-35
	4.9.2	Switch Bank 2 K11 and Buffer 11J, 11K (Schematic P11)	4-37
	4.9.3	Switch Bank 3 K12 and Buffer 12J, 12K (Schematic P11)	4-38
	4.9.4	Switch Bank 4 A12 (Schematic P5, P6, P8, P11)	4-38
5	MAINTENANCE		
5.1	INTRODUCTION		5-1
5.2	PREVENTIVE MAINTENANCE		5-1
5.3	CORRECTIVE MAINTENANCE		5-1
	5.3.1	Problem Identification	5-1
	5.3.2	Removing and Replacing the Main PCBA	5-4
	5.3.3	Removing and Replacing Key Switch Contacts	5-4
	5.3.4	Removal and Replacement of the Monitor	5-12
	5.3.5	Removal and Replacement of Switching Power Supply	5-13/14
	5.3.6	Adjustments	5-13/14
6	DRAWINGS		

129541	(6 Shts)	Configuration Control ADM-31
129850		Data Display Terminal Assembly
129860	(Sht 1)	Main PC Board Assembly - 7 Layout
129860	(Sht 3)	Main PC Board Assembly - 5 Layout
129861-7	(12 Shts)	ADM-31 Schematic-7 PCBA
129861-5	(12 Shts)	ADM-31 Schematic-5 PCBA
129868	(3 Shts)	Power Cable Assembly ADM-31
129869	(3 Shts)	Monitor Cable Assembly ADM-31

TABLE OF CONTENTS (continued)

SECTION PAGE

7 REPLACEABLE PARTS INFORMATION

7.1 ADM-31 REPLACEABLE PARTS INFORMATION..... 7-1
7.2 MONITOR REPLACEABLE PARTS INFORMATION..... 7-2
7.3 SWITCHING POWER SUPPLY REPLACEABLE PARTS INFORMATION..... 7-2

APPENDIX A

Operator's Quick Reference Guides

APPENDIX B

ADM-31 1C Part Numbers and Pin Assignments

APPENDIX C

Monitor (TTL Data Display 120/150)

APPENDIX D

ADM-31 Switching Power Supply

APPENDIX E

Factory Service and Maintenance Information

LIST OF FIGURE

FIGURE PAGE

1-1 ADM-31 Data Display Terminal..... x
1-2 ADM-31 Data Flow Block Diagram..... 1-3
1-3 ADM-31 Character Format (By Ascending ASCII Codes) With HEX Code..... 1-8
1-4 Word Format Codes with DIP Switch Configuration. 1-12
1-5 Optional Features and Component Location..... 1-13

2-1 Typical ADM-31 Interfaces..... 2-4
2-2 ADM-31 Interface Logic..... 2-5

LIST OF FIGURES (continued)

FIGURE		PAGE
3-1	ADM-31 Data Display Terminal Keyboard	3-2
3-2	ADM-31 Rear Panel Control Location	3-22
3-3	Chart of CTRL Key Sequence Characters, With HEX Coding	3-25
3-4	ADM-31 Escape Sequence Characters, With HEX Coding	3-36
3-5	ADM-31 Standard Graphic Character Set, With HEX Coding	3-37
3-6	Chart of Absolute Cursor Positioning Codes	3-42
4-1	ADM-31 Functional Block Diagram	4-3
4-2	CPU Section Block Diagram	4-5
4-3	M6800 MPU Block Diagram	4-7
4-4	MPU Flowchart	4-9
4-5	External Interface Section Block Diagram	4-12
4-6	Typical Daisychain Configuration	4-16
4-7	Memory Section Block Diagram	4-24
4-8	Keyboard Section Block Diagram	4-28
4-9	Video Section Block Diagram	4-31
4-10	System Configuration Switch Select Block Diagram	4-36
5-1	Removing The Plunger	5-6
5-2	Insertion Tool Guideway	5-7
5-3	Placing The Solid Contact In The Insertion Tool	5-8
5-4	Inserting The Split Contact In The Insertion Tool	5-9
5-5	Placing The Insertion Tool Into The Guide	5-10
5-6	Replacing The Plunger	5-11

LIST OF TABLES

TABLE		PAGE
1-1	ADM-31 Specifications	1-9
2-1	Configuration Control Switch Settings	2-6
2-2	Data Interface Connector Pin/Signal List	2-8
3-1	Keyboard Operations	3-4
3-2	Editing Example	3-11
3-3	ADM-31 Rear Panel Controls	3-23
3-4	Special Control Operations	3-26

LIST OF TABLES (continued)

TABLE		PAGE
4-1	Chip Select Signals	4-10
4-2	ACIA Control Register Bit Functions	4-18
4-3	ACIA Status Register	4-20
4-4	ROM Select Signals	4-25
4-5	MPU Selection of PIA Registers	4-29
4-6	DDRA and DDRB System Reset Configurations	4-29
4-7	MODEM or Printer Interface Word Configuration	4-37
5-1	ADM-31 Troubleshooting Guide	5-2

PREFACE

This Maintenance Manual provides all the information required to perform routine and corrective maintenance on the ADM-31 Data Display Terminal. The instructions and information may also be used to aid operational personnel in the installation, operation, and care of the ADM-31. All operator controls are described in detail, and remote programming considerations are presented in sufficient detail to enable an experienced operator to use the equipment efficiently when confronted with non-standard applications.

The major topics described in this manual include:

Section 1 General Description

Section 2 Installation

Section 3 Operation

Section 4 Theory of Operation

Section 5 Maintenance

Section 6 Drawings

Section 7 Replaceable Parts Information

Figure 1-1. ADM-31 Data Display Terminal

COAST BOOK COVER
COMPANY

SECTION 1

GENERAL DESCRIPTION

1.1 INTRODUCTION

This section contains a description of the primary functions of the Lear Siegler ADM-31 Data Display Terminal (see Figure 1-1), along with physical dimensions, specifications and ranges, and operating features.

1.2 PURPOSE AND USE

There are numerous applications of the ADM-31, all involving the transfer of data. Data transfer, in some applications, may be almost exclusively unidirectional; either from the ADM-31 to the computer, or from the computer to the ADM-31. A more frequent application of the ADM-31, however, is one in which an operator communicates with a computer, and the computer responds in accordance with its stored program.

The ADM-31 has the following general capabilities:

- Full 128 ASCII character set with 80 x 24 character non glare display
- 14 transmission rates and 5 transmission modes
- Data key roll-over protection
- 15-Key numeric keyboard
- 5 Separate cursor control keys
- Two full pages of memory
- Program Mode
- Special control character sequences
- Full editing, formatting, and protected fields capabilities

- Variable 10-or 11-bit word structures
- Dynamic behavior (personality) modification
- Selectable refresh rate
- Reversed, blinking, and blanked fields
- Standard RS-232-C, 20 ma current loop, and RS-232-C extended interfaces, with optional line printer and polling interfaces.

1.3 OPERATIONAL DESCRIPTION

The ADM-31 is a microprogram-controlled device which provides a means of communicating with a remote computer, and which allows the user full control of the content and format of data entered by means of the keyboard. Figure 1-2 illustrates the flow of data through the functional areas of the ADM-31.

The standard ADM-31 consists of a power supply, keyboard, control section (CPU), video logic and control, CRT display, configuration control switches, and external interface logic. The interface logic permits the following interfaces: standard RS-232-C, current loop, and extended RS-232-C interfaces via the MODEM and EXTENSION ports; polling interface via the MODEM port; serial printer interface via the AUXILIARY port.

1.3.1 Switching Power Supply

The ADM-31 power supply is a 52-watt switching power supply mounted on a printed circuit board which is adjacent to the main printed circuit board assembly. Four regulated dc voltages are furnished for use by the CPU: +55/40 volts, +5 volts, and ±12 volts. The power supply can accept line voltage inputs of 115 Vac or 230 Vac (with 230 volt transformer and connections).

1.3.2 Keyboard

Data to be processed by the terminal is either from the keyboard or is sent from the remote computer. Keyboard entry is made using one of the 90 keys on the keyboard. Each keystroke is encoded into a parallel ASCII character which appers on seven data lines connected to the CPU. Accompanying the 7-bit character is a keystroke which alerts the program that a character is to be input from the keyboard.

1.3.3 Control Section (CPU)

The Control Section (CPU) contains the microprocessor and various integrated circuits which control all the operations of the

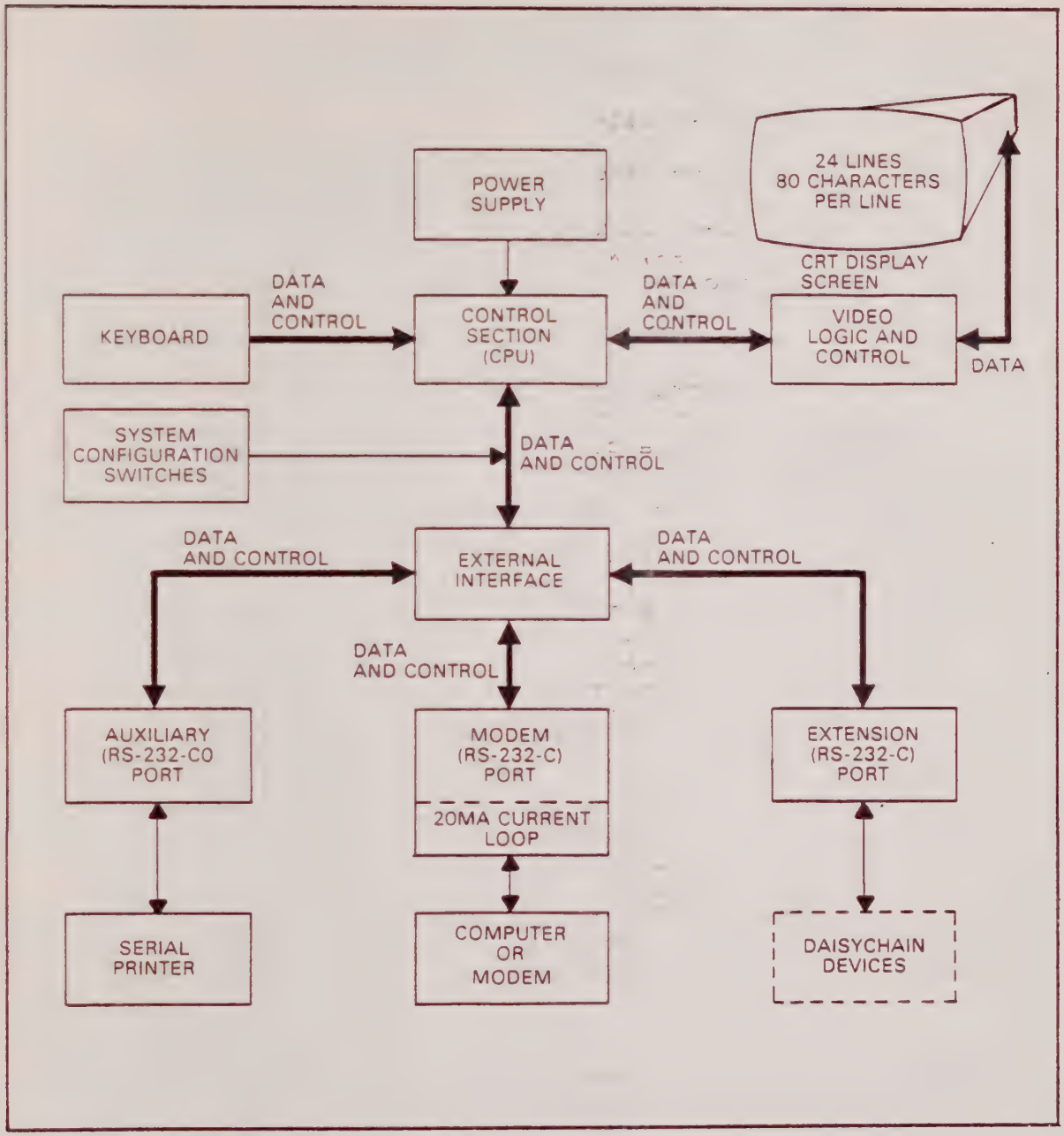

Figure 1-2. ADM-31 Data Flow Block Diagram

ADM-31. These operations include: timing and control, data handling and storage, interpreting and responding to control commands from the keyboard and the computer, video control, I/O interfacing, and status control.

Data entered from the keyboard is placed on the Data Bus and sent to the CPU section, which contains the microprocessor and various other integrated circuits and switches. The CPU, executing a stored read only memory (ROM) program, decodes the input data and reformats it into data and control instructions for the video logic and control section.

1.3.4 Video Logic and Control

The Video Logic and Control section contains the display logic needed to drive the CRT, 4k of random access memory (RAM), and character generation circuits, as well as the video logic and 12-inch monitor. The monitor screen can display 24 lines of data containing as many as 80 characters per line. Data from the CPU is written into the video RAM; control instructions from the CPU cause the contents of the RAM to be periodically displayed on the CRT screen.

1.3.5 External Interface

Data and control information from a remote computer is routed through the MODEM port to the external interface section, and then to the CPU. The CPU causes data to be displayed on the CRT in the same manner as the keyboard data. The interface contains the logic circuitry appropriate for interfacing with RS-232-C point-to-point signals, 20-ma current loop signals, and modem logic. Optional circuits for an RS-232-C serial printer interface and for polling are also provided. The external interface also contains the baud rate clock and baud rate switches which permit the ADM-31 to receive or transmit data at selected baud rates from 50 to 9600 baud.

The ADM-31 trasmits data by retrieving data from the video RAM and placing it on the Data Bus for routing to the CPU. The CPU reformats the data and routes data and control information to the external interface section over the Data Bus. External interface logic is used to prepare the data and control information for transmission to the appropriate device connected.

1.3.6 System Configuration Switches

Four banks of system configuration switches are provided to control various attributes and characteristics of the ADM-31. The switches

are mounted internally. The characteristics thus controlled include: mode of transmission/reception, parity, word structure, refresh rate, cursor/display attributes, and polling address (future).

1.4 PHYSICAL DESCRIPTION

The ADM-31 Data Display Terminal is a complete self-contained unit. The terminal consists of three main physical units: circuit board with keyboard, microprocessor, memory, and logic; monitor with CRT display; and switching power supply. All circuitry, cabling, and all required hardware, are enclosed within a two-section lightweight housing. The two sections are hinged together at the rear, where the interface connectors, baud switches, brightness/contrast control, fuse, and power cord are located. The upper section contains the CRT screen and video electronics. Secured to the base of the lower section is a single printed circuit board assembly (PCBA) which contains the microprocessor, logic circuits, and system configuration switches. The switching power supply PCBA is located beneath the main PCBA.

The keyboard contains 90 alpha numeric and special character keys which are arranged like a standard teletypewriter. The keyboard and the accompanying solid state logic circuits are used to generate the 128 ASCII characters in the standard ADM-31 character set. Included in this character set are 32 control characters which can be produced only by special function key sequences. A roll-over feature is incorporated in the keyboard to protect against mis-keying. (If a second key is pressed before the key first pressed is released, the second code will not be transmitted until the first key has been released.)

The main PCBA containing the microporcessor, memory, and logic is the source of all control and coordinating activities in the ADM-31. The circuits on this PCBA transfer keyboard information into the display memory, display the contents of the memory on the CRT, recognize control commands typed at the keyboard, and execute the commands. The circuits also supervise communications to and from the remote computer and recognize control commands received through the terminal interfaces.

The monitor is a fully transistorized unit featuring printed circuit board construction. The display screen is a 12-inch diagonal cathode ray tube (CRT) similar to that of a black-and-white television receiver. The display is a high resolution matrix of 80 x 24 characters consisting of large letters, numbers, and other symbols. Information on display is refreshed at 50 Hz

or 60 Hz, depending on the line frequency. (an internally located DIP switch must be appropriately set at installation.) Brightness and contrast are individually adjustable by means of a rear panel control.

The switching power supply, providing four regulated dc voltages for use by the main PCBA circuits, is contained on its own printed circuit board and mounted under the main PCBA. The four outputs have a total power rating of 52 watts. The ac input voltage may be either 115 volts or 230 volts at 60 Hz. DC output voltages are as follows:

- +55/40 volts at 0.55/0.75 amperes nominal load, +5% regulation
- +5 volts at 3.0 amperes nominal load, with ±5% regulation and overload protection
- ±12 volts at 0.3 amperes nominal load each, with ±5% regulation

1.5 SPECIFICATIONS

Table 1-1 lists the leading specifications for the ADM-31. In addition, several operational features, such as various transmission modes, character format, word structures, and configuration control are discussed in the paragraphs that follow.

1.5.1 Transmission Modes

Various transmission modes are utilized by the ADM-31; these include the Block and Conversation Modes. The Block Mode permits the operator to edit and perform off-line operations, and then come on-line for the actual transmission of the data. Processing time is limited to the actual transmission time only. In the Conversation Mode, either full-duplex or half-duplex operation is possible. Block and Conversation Modes are selected through the escape (ESC) sequences (two-key sequence).

Block Mode

In the Block Mode, information is transmitted and received as complete messages or blocks of data (compared with character-by-character operation in the Conversation Mode). The characters are stored and displayed, but are not automatically transmitted. The operator or the computer enters the complete message, up to two full pages in length. After the message has been completed, the operator can edit the information. If desired, the operator

may select only part of the information for transmission. This is done by inserting control characters in the copy during the editing phase. These control characters signal the start of message and the end of message. Then when the SEND PAGE or SEND MESSAGE COMMAND is issued, only the copy between the control characters is transmitted.

The Block Mode, besides providing the edit capability, also permits faster transmission of large blocks of data than can be obtained in the Conversation Mode. It also permits more efficient utilization of the remote computer and data transmission lines. The ADM-31 can operate off-line when the information is being typed and edited, and come on-line only during the acutual transmission. Then too, the baud rate can be increased, which results in a reduction of computer time (to receive the information), as compared to having the operator send the same message in the Conversation Mode.

Conversation Mode, Half-Duplex

In this mode, the ADM-31 can send and receive information to and from the remote computer, but in only one direction at a time. Characters are displayed, and simultaneously transmitted, one character-at-a-time as they are typed at the keyboard. Received characters are displayed as they are received.

Conversation Mode, Full-Duplex

The ADM-31 can transmit and receive information in both directions simultaneously in full-duplex operation. Characters are transmitted as they are typed, but are displayed only on reception. In order for transmitted characters to be displayed in full-duplex operation, they must be echoed from the remote computer back to the ADM-31.

1.5.2 Character Format

The standard ADM-31 character set contains 128 ASCII characters, 32 of which are control characters that require two-key special function sequences to produce from the keyboard. (See Figure 1-3.) The entire character set can be displayed on the CRT screen if transmission from computer or keyboard is preceded by an escape sequence (ESC U) placing the terminal in Program Mode.

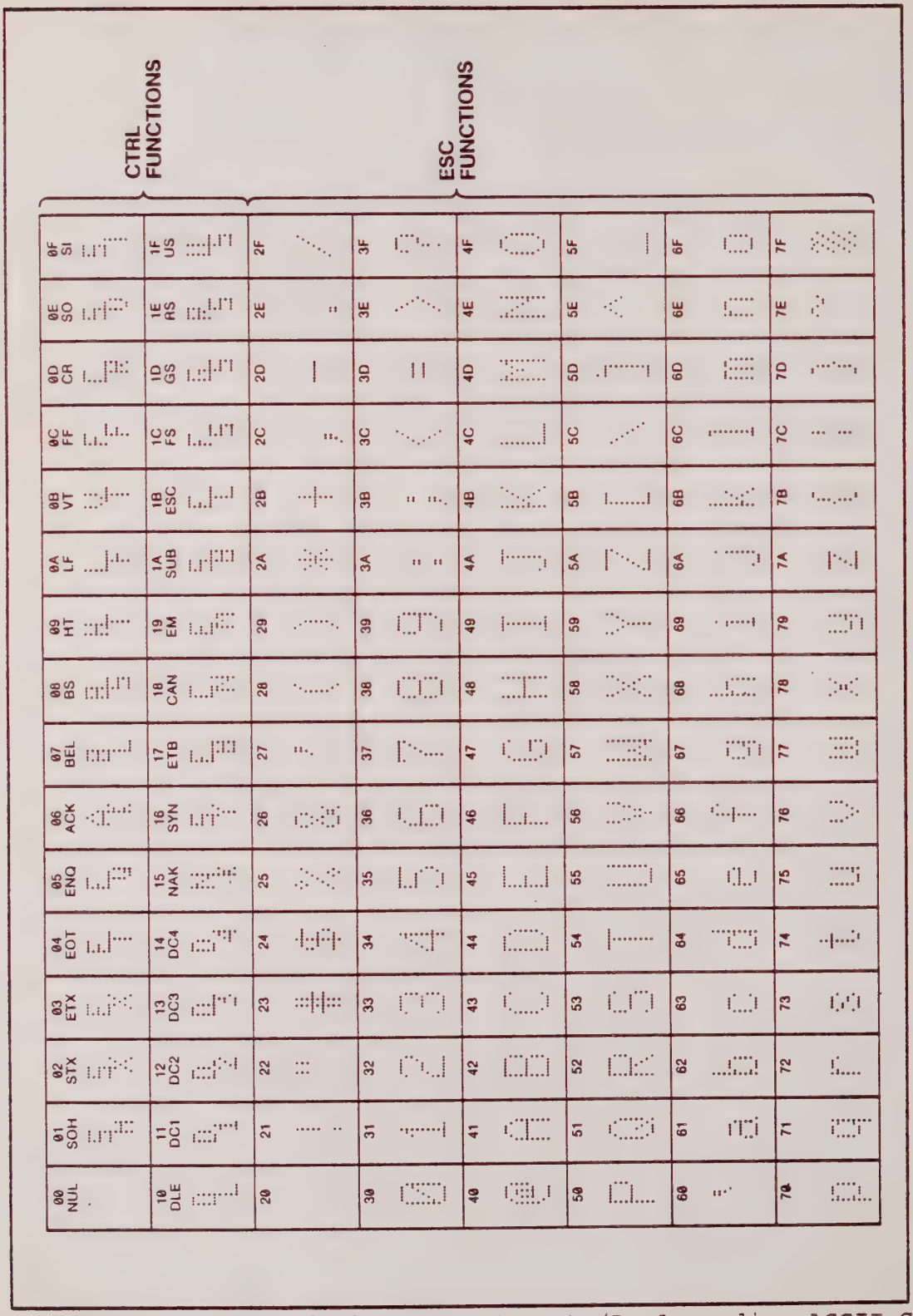

Figure 1-3. ADM-31 Character Format (By Ascending ASCII Codes) With HEX Code

Table 1-1. ADM-31 Specifications

SPECIFICATION	DESCRIPTION
Input Power:	
Standard	115 volts ±10%, 50/60 Hz; Single Phase; 3-wire
Optional	230 volts ±10%, 50/60 Hz; Single Phase; 3-wire
Power Dissipation	65 watts, nominal (rated: 0.75A at 120 volts)
Operating Temperature	Between 41°F (5°C) and 122°F (50°C)
Relative Humidity	From 5% to 95% non-condensing
Altitude	Up to 10,000 feet (3048M)
Physical Dimensions	13.5 in. (34.3 cm) High X 15.6 in. (39.6 cm) Wide X 20.2 in. (51.3 cm) Deep
Weight	32 pounds (14.54 Kg)
CRT Screen Size	12 inches (30.5 cm) diagonally
Display Format	80 characters per line x 24 lines; 2 pages, maximum
Character Set	128 ASCII characters (with 32 control characters); upper/lower case fonts; 9 x 11 dot matrix pattern
Refresh Rate	50/60 hertz (depending upon line frequency)
Cursor:	
Format	Reverse video rectangle (10 x 12 dot matrix)

Table 1-1. ADM-31 Specifications (cont'd)

SPECIFICATION	DESCRIPTION
Control	Left (←); Right (→); Up (↑); Down (↓); HOME; LINE FEED; NEW LINE; RETURN; TAB; BACK TAB; position addressing/reading
Keyboard:	
Construction	Solid state logic; similar to teletypewriter layout; numeric/cursor key pads
Key Assignment	Data and Special Character 60 Cursor and Format 17 Special Function 9 Terminal Control 4
Communications:	
Standard Interface	EIA RS-232-C; 20-ma current loop; extended RS-232-C
Optional Interfaces	Serial printer; polling (future)
Data Transmission Rates	50, 75, 110, 134.5, 150, 300, 600, 1200, 1800, 2000, 2400, 3600, 4800, 7200, 9600 baud
Transmission Modes	Block Mode; Conversation Mode, Half Duplex; Conversation Mode; Full Duplex
Code for Transmission	Asynchronous ASCII
10-Bit Word Format	(1) 7 data bits; odd/even parity; START bit, 1 STOP bit (2) 8 data bits; START bit; 1 STOP bit
11-Bit Word Format	(1) 7 data bits; START bit; odd/even parity; 2 STOP bits (2) 8 data bits; START bit; odd/even parity; 1 STOP bit

1.6 OPTIONAL FEATURES

The following options are available for use on the ADM-31.

1.6.1 Serial Printer Interface

A serial printer interface is available through the AUXILIARY port which allows the ADM-31 to control a serial character printer using RS-232-C standards. Several internal configuration control DIP switches are provided to enable or disable certain printer control logic functions. Operation of the printer may be initiated from the keyboard or a remote computer. In addition, a rear-panel mounted baud rate switch makes possible the selection of one of 15 baud rates from 50 to 9600 baud.

1.6.2 Polling Interface (Future)

A polling interface, through the MODEM port, allows the ADM-31 to act as a polling terminal in a multi-point communications network. When enabled, the option causes the terminal to communicate only with and only as directed by the network control center. Internal DIP switches are provided for enabling the option and for establishing the polling address for the terminal.

1.6.3 Word Structure

The ADM-31 can transmit and receive data characters in any one of the asynchronous character formats shown in Figure 1-4. These word format codes are selected by means of DIP switches located internal to the ADM-31.

1.6.4 Configuration Control

Four sets (banks) of DIP switches are provided on the main PCBA, which can be used to establish or change certain operational characteristics of the ADM-31. Figure 1-5 shows the location and function of Swich Banks 1 thru 4. The functions controlled by the switch banks are described below.

WORD FORMAT	DIP SWITCH CONFIGURATIONS			WORD STRUCTURE										
	SW5	SW4	SW3	BIT Ø	BIT 1	BIT 2	BIT 3	BIT 4	BIT 5	BIT 6	BIT 7	BIT 8	BIT 9	BIT 1Ø
Eleven-Bit Word with Even Parity and 2 STOP Bits	ON	ON	ON	$S_{t_{a_{r_t}}}$	ACTIVE BITS = 1 OR Ø							even parity	stop	stop
Eleven-Bit Word with Odd Parity and 2 STOP Bits	ON	ON	OFF	$S_{t_{a_{r_t}}}$	ACTIVE BITS = 1 OR Ø							odd parity	stop	stop
Ten-Bit Word with Even Parity and 1 STOP Bit	ON	OFF	ON	$S_{t_{a_{r_t}}}$	ACTIVE BITS = 1 OR Ø							even parity	stop	X
Ten-Bit Word with Odd Parity and 2 STOP Bits	ON	OFF	OFF	$S_{t_{a_{r_t}}}$	ACTIVE BITS = 1 OR Ø							odd parity	stop	X
Eleven-Bit Word with No Parity and 2 STOP Bits	OFF	ON	ON	$S_{t_{a_{r_t}}}$	ACTIVE BITS = 1 OR Ø							always Ø	stop	stop
Ten-Bit Word with No Parity and 1 STOP Bit	OFF	ON	OFF	$S_{t_{a_{r_t}}}$	ACTIVE BITS = 1 OR Ø							always Ø	stop	X
Eleven-Bit Word with Even Parity and 1 STOP Bit	OFF	OFF	ON	$S_{t_{a_{r_t}}}$	ACTIVE BITS = 1 OR Ø							always 0	even parity	stop
Eleven-Bit Word with Odd Parity and 1 STOP BIT	OFF	OFF	OFF	$S_{t_{a_{r_t}}}$	ACTIVE BITS = 1 OR Ø							always 0	odd parity	stop

Figure 1-4. Word Format Codes With DIP Switch Configurations

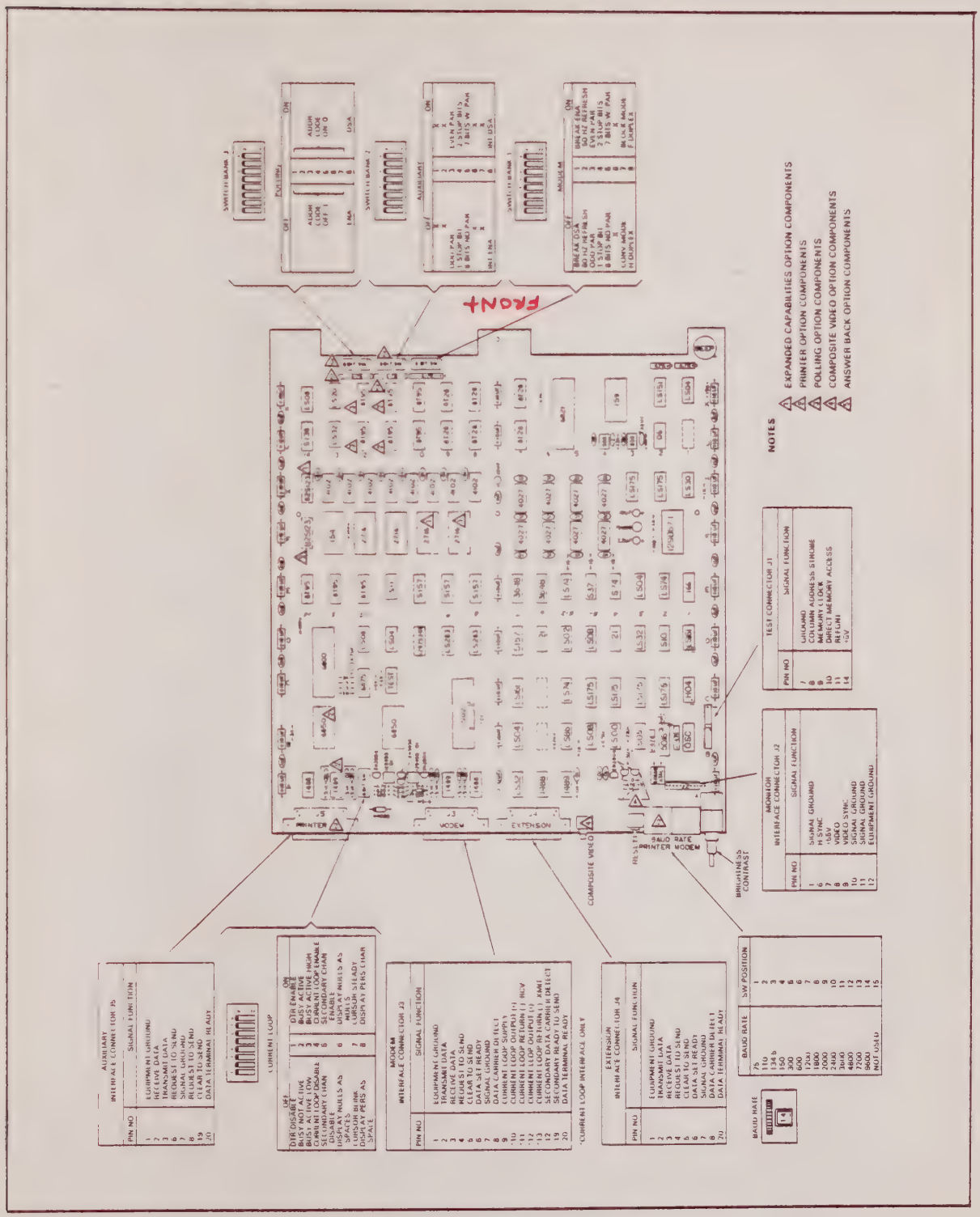

Figure 1-5. Optional Features And Component Location

Switch Bank 1 K10

Switch Bank 1 has seven active switches which operate as follows:

- SW 1 controls the operation of the keyboard BREAK key: OFF disables the key; ON enables the key
- SW 2 controls the monitor refresh rate: OFF for 60 Hz line frequency; ON for 50 Hz frequency
- SW 3, 4, 5 control the MODEM interface word structure, in accordance with the settings shown in Figure 1-4
- SW 7 controls the basic ADM-31 transmission mode: OFF for Conversation Mode; ON for Block Mode. The transmission mode may be dynamically changed by an escape sequence.
- SW 8 OFF establishes Conversation Mode Half Duplex operation; ON establishes Conversation Mode Full Duplex operation. Half or Full Duplex operation may be dynamically selected by an escape sequence.

Switch Bank 2 K11

Switch Bank 2 has three active switches which operate as follows:

- SW 3, 4 5 control the AUXILIARY interface port word structure in accordance with the settings shown in Figure 1-4.

Switch Bank 3 K12

Switch Bank 3 has eight active switches when the (future) Pooling Option is exercised, which operate as follows:

- SW 1 thru 7 control the polling address: OFF = 1; ON = 0
- SW 8 OFF enables the Polling Option; ON disables the option

Switch Bank 4 A12

Switch Bank 4 has eight active switches, which operate as follows:

- SW 1 controls the DATA TERMINAL READY line through AUXILIARY interface port J3. ON enables the line; OFF disables the line

OPERATOR'S QUICK REFERENCE GUIDE TO ESCAPE SEQUENCE

Keys Used: ESC/SHIFT/(ASCII Character) or ESC/(ASCII Character)

	ESCAPE SEQUENCE					
HEX	2	3	4	5	6	7
0		0	@ PRINT w/o PROT	P PRINT PAGE	`	p
1	!	1	A BUFF PRNTM*	Q INSERT CHAR	a	q SET INS MODE
2	" KBD ENA	2	B SET BLOCK	R DELETE LINE	b	r CLEAR INS MODE
3	# KBD DISA	3	C SET CONV	S SEND MSG	c	s
4	$	4 SEND FG LINE	D SET DUPLH or F	T ERASE LINE PERS	d	t
5	%	5 SEND PAGE	E IN-SERT LINE	U SET PGM MODE	e	u CLEAR PGM MODE
6	& SET PROTM	6 SEND ALL LINE	F	V	f	v SET AUTO PG
7	' CLEAR PROTM	7 SEND ALL PAGE	G ATTRIB CONTROL *	W DELETE CHAR	g	w CLEAR AUTO PG
8	(CLEAR WPROT	8	H	X CLEAR PGM MODE	h	x
9	) SET WPROT	9	I BACK TAB	Y ERASE PAGE PERS	i TAB (SKIP)	y ERS PG TO NULL
A	* CLEAR ALL NULL	: CLEAR ALL NULL	J PAGE BACK	Z	j	z
B	+ CLR FG SP/PERS	; CLR FG SP/PERS	K PAGE FWD	[	k	{
C	, CLR TO PROT SP	<	L UNFORM PRNT	\	l	|
D	- LOAD PRC *	= LOAD RC *	M	]	m	}
E	. CHANGE PERS *	>	N	^	n	~
F	/ READ PRC *	? READ RC *	O	_	o DPLY PERS *	DEL

*Multiple Characters Required

OPERATOR'S QUICK REFERENCE GUIDE TO ABSOLUTE CURSOR POSITIONING SEQUENCE

Keys Used: ESC/YX* code)

X or Y	ASCII CODE	HEX CODE	X or Y	ASCII CODE	HEX CODE	X or Y	ASCII CODE	HEX CODE
1	SPACE	20	28	;	3B	55	V	56
2	!	21	29	<	3C	56	W	57
3	"	22	30	=	3D	57	X	58
4	#	23	31	>	3E	58	Y	59
5	$	24	32	?	3F	59	Z	5A
6	%	25	33	@	40	60	[	5B
7	&	26	34	A	41	61	\	5C
8	'	27	35	B	42	62	]	5D
9	(	28	36	C	43	63	^	5E
10	)	29	37	D	44	64	_	5F
11	*	2A	38	E	45	65	`	60
12	+	2B	39	F	46	66	a	61
13	,	2C	40	G	47	67	b	62
14	-	2D	41	H	48	68	c	63
15	.	2E	42	I	49	69	d	64
16	/	2F	43	J	4A	70	e	65
17	0	30	44	K	4B	71	f	66
18	1	31	45	L	4C	72	g	67
19	2	32	46	M	4D	73	h	68
20	3	33	47	N	4E	74	i	69
21	4	34	48	O	4F	75	j	6A
22	5	35	49	P	50	76	k	6B
23	6	36	50	Q	51	77	l	6C
24	7	37	51	R	52	78	m	6D
25	8	38	52	S	53	79	n	6E
26	9	39	53	T	54	80	o	6F
27	:	3A	54	U	55			

*Use ASCII characters associated with the YX (vertical-horizontal) coordinates desired.

- SW 2 and SW 3 control the Printer BUSY line through AUXILIARY interface port J3, as follows:

  SW 2 ON & SW 3 OFF = BUSY Active (Not Ready) high

  SW 2 & SW 3 ON = BUSY active (Not Ready) low

  SW 2 & SW 3 OFF = BUSY disabled

- SW 4 and SW 5 control the current loop/secondary channel interface, as follows:

  SW 4 ON & SW 5 OFF = Current loop enabled

  SW 4 OFF & SW 5 ON = Secondary Channel enabled

  SW 4 & SW 5 OFF = Current Loop and Secondary Channel disabled

- SW 6 controls how NULL characters will be displayed on the CRT: ON displays NULLS as spaces; OFF displays NULLS as NULLS. This characteristic may be changed dynamically by an escape sequence.

- SW 7 ON causes the cursor remain steady; OFF causes the cursor to blink.

- SW 8 controls CRT display of the personality attribute character: ON causes character to be displayed; OFF causes a space to be displayed instead of character

1.6.5 Composite Video

The composite video option converts the CRT's video and sync signals into a composite video output which is then routed to the rear-panel COMPOSITE VIDEO output connector. Data can then be transmitted to a compatible composite video monitor located up to 1000 feet away, through a single coaxial cable. The ADM-31 can function in its normal capacity at the same time it is serving as a control terminal for a remote monitor.

1.6.6 Answer Back Option (Future)

The automatic answer back option provides terminal identification and allows the ADM-31 to respond to an ENQ input from the computer with the answer back message. The answer back message will be displayed as it is being transmitted, if the terminal is in Conversation Mode, Half Duplex.

1.6.7 230-VAC Input Power

Standard input power for the ADM-31 is 115 volts ac at 50/60 Hz. 230 Vac power at 50/60 Hz is readily accommodated by changing the power supply and the main logic board connections. Internal DIP switches establish the video refresh rate at 50 or 60 Hz, depending upon line frequency.

1.7 RELATED DOCUMENT

None

SECTION 2

INSTALLATION

2.1 INTRODUCTION

Installation procedures involving unpacking, initial set-up, and operational checkout of the ADM-31 Data Display Terminal are described in this section of the manual. In addition, the several interface modes of installation are described in detail.

2.2 SAFETY REQUIREMENTS

No special safety precautions are required for ADM-31 installation.

2.3 SITE REQUIREMENTS

The ADM-31 Data Display Terminal may conveniently be used in a normal office environment, as no special mounting provisions are required. However, it is recommended that a weather protected environment with an ambient temperature range of 41°F to 122°F (5°C to 50°C), relative humidity not greater than 95% be maintained for equipment use.

Whenever the ADM-31 is physically moved from a cold location to a warmer environment, be sure to allow sufficient time for the equipment temperature to equalize with the warmer location before activating the terminal. Condensation developed by the temperature differential could possibly impair ADM-31 operation.

CAUTION:

Allow warm up of unit when changing locations from one room to another, because condensation may develop in the unit, which may effect the operation of the device.

The physical dimensions of the ADM-31 are given in Table 1-1, along with installation power and environmental parameters. The basic requirements for installation are the following:

- Table or desk for mounting
- Standard three-pronged 115-volt (230 volt) power outlet
- Data signal interface connection to the computer, modem, serial printer, or other auxiliary device. If connection to a remote computer is desired, a modem or data set is required.

2.4 UNPACKING AND INITIAL INSPECTION

Each ADM-31 unit is packed using standard practices for the shipping of electronic equipment. Every precaution is taken to ensure that each unit is complete and ready for installation at the customer site. However, it is recommended that each unit be inspected upon receipt for transit damage. Inspect for exterior evidence of damage. Contact the carrier and LSI immediately if damage is evident, specifying the nature and extend of the damage (if known).

If there is no apparent shipping damage, open the shipping carton and remove the items, checking them against the shipping list to verify the contents of the carton. Contact LSI immediately in the event of a packing shortage. Check to verify that the serial number of the unit corresponds to that shown on the invoice. Visually inspect the exterior of the enclosure for evidence of physical damage which may have occurred in shipment.

Check the hardware to determine if any assemblies or screws have been loosened during shipment. Tighten or reseat as required. Inspect for dust or foreign material which may impair electrical contact when cable connections are made. Vacuum to remove any loose dirt. Remove bubble packing from interior of the terminal.

2.5 INITIAL PREPARATION

2.5.1 Line Voltage Selection

The ADM-31 is shipped connected for either 115-volt or 230 volt operation, as specified in the purchase order. Any change in line voltage requires circuit changes in the ADM-31 which can be accomplished only by authorized LSI maintenance personnel.

2.5.2 Configuration Control Switch Settings

Four internal DIP switch banks are provided for encoding selected system configuration characteristics. The locations of these switch banks on the main PCBA are shown in Figure 1-5; their

functions are summarized in Table 2-1. The switches can be reached by opening the ADM-31 cover, as follows:

(1) Remove the two slot-head screws located under the front corners of the terminal base.

(2) Lift the cover upwards and rearwards from the front unit it rests on the table or desk.

2.6 INTERFACE INFORMATION

The ADM-31 may be cabled directly to a local computer, serial printer, or other auxiliary device, or it may be connected via telephone data lines to a remote computer located anywhere in the world. Remote computer connections require the use of a modem or data set. Figure 2-1 shows several typical ADM-31 interfaces, while Figure 2-2 shows the ADM-31 interface logic associated with the interfaces.

2.6.1 RS-232-C MODEM Port Interface

The MODEM port interface is used to connect the terminal directly to a computer, modem or data set, or to a computer or device in a current-loop application. Table 2-2 lists the connector pin vs. signal functions for this interface.

2.6.2 RS-232-C AUXILIARY Port Interface

The AUXILIARY port interface is used for connecting between the terminal and a serial printer. Refer to Table 2-2 for the serial printer interface data.

2.6.3 RS-232-C EXTENSION Port Interface

The EXTENSION port interface enhances the standard RS-232-C capabilities of the ADM-31 to permit daisychaining of several terminals or other auxiliary devices. Table 2-2 provides interface data associated with this port.

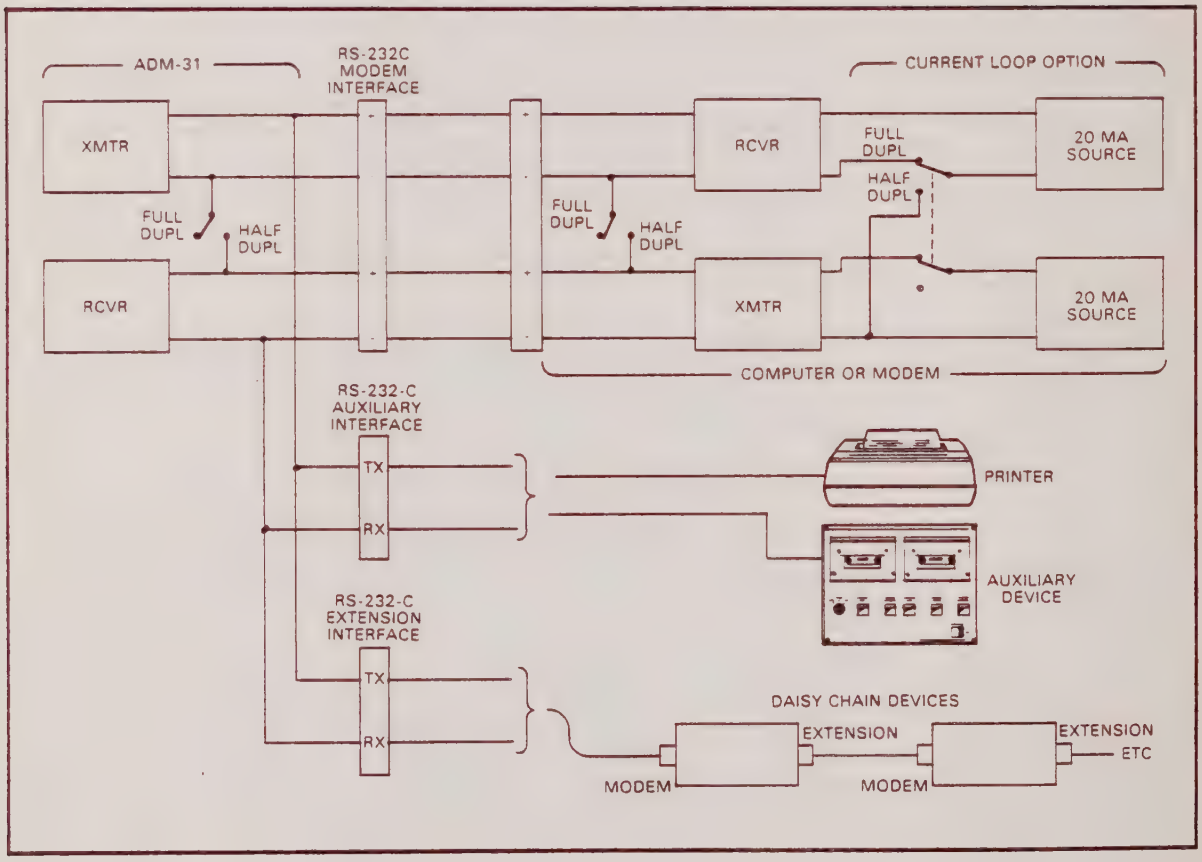

Figure 2-1. Typical ADM-31 Interfaces

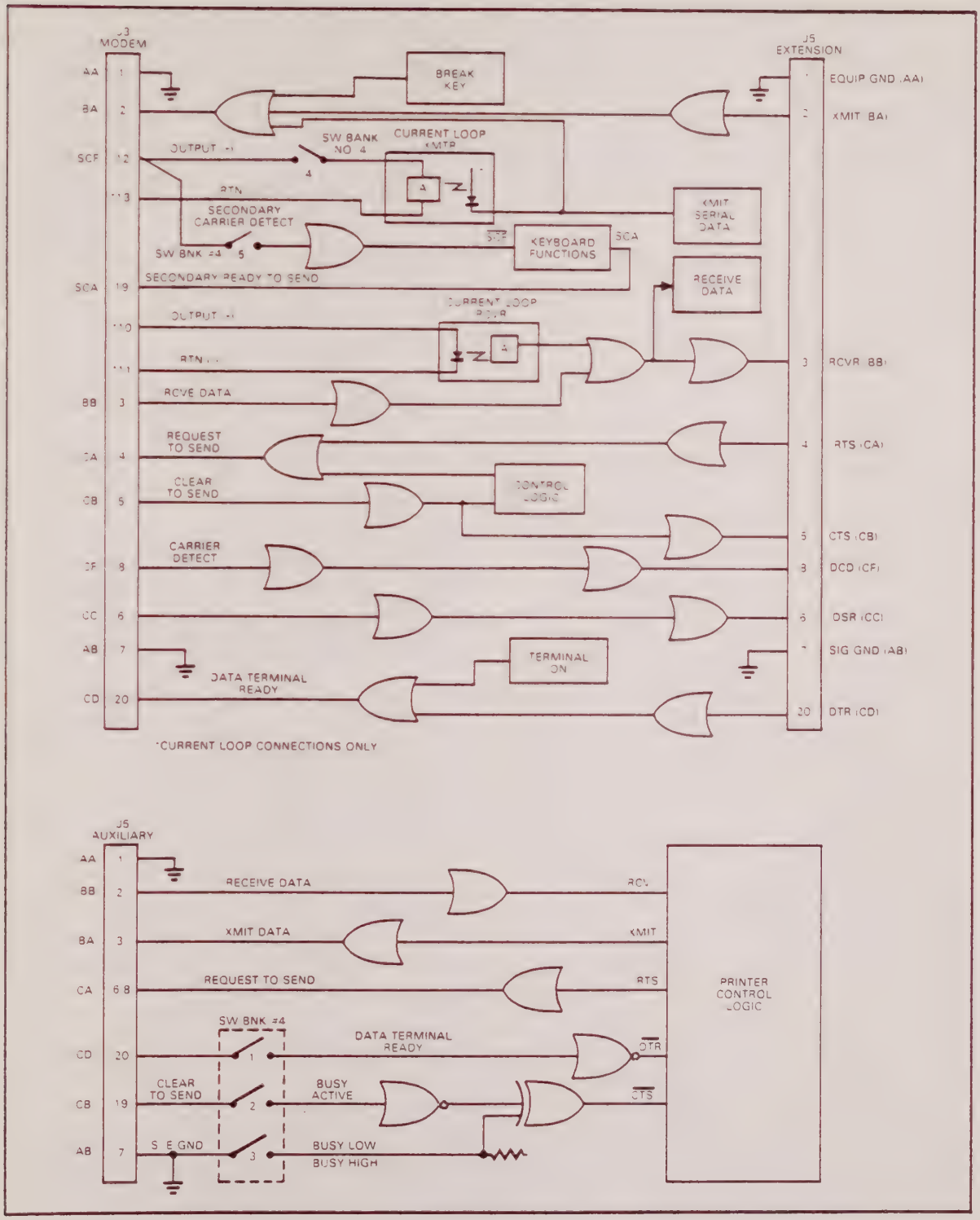

Figure 2-2. ADM-31 Interface Logic

Table 2-1. Configuration Control Switch Settings

SWITCH BANK NUMBER	SWITCH NUMBER	FUNCTION	ON	OFF
1 MODEM (LOCATION K10)	1	Break Enable/Disable	Break Enable	Break Disable
	2	Memory Refresh Rate	50 Hertz	60 Hertz
	3	Parity	Even Parity	Odd Parity
	4	Stop Bits	Two Stop Bits	One Stop Bit
	5	Data Bits	7 Bit Data	8 Bit Data
	6	Not Used		
	7	Transmission Mode	Block Mode	Conversation Mode
	8	Transmission Mode	Full Duplex	Half Duplex
2 AUXILIARY (LOCATION K11)	1	Not Used		
	2	Not Used		
	3	Parity	Even Parity	Odd Parity
	4	Stop Bit	Two Stop Bits	One Stop Bit
	5	Data Bits	7 Data Bits	8 Data Bits
	6	Not Used		
	7	Not Used		
	8	Reserved		

Table 2-1. Configuration Control Switch Settings (cont'd)

SWITCH BANK NUMBER	SWITCH NUMBER	FUNCTION	ON	OFF
3 POLLING (LOCATION K12)	1	User Selected Terminal Address	0	1
	2		0	1
	3		0	1
	4		0	1
	5		0	1
	6		0	1
	7		0	1
	8	Enable or Disable Polling	Disable Polling	Enable Polling
4 CURRENT LOOP (LOCATION A12)	1	Printer DTR Enable/Disable		Disable (Should be OFF for BUSY Control)
	2	Printer Port BUSY	Active	Not Active
	3		Active Low	Active High
	4	Current Loop	Enable	Disable
	5	Secondary Channel	Enable	Disable
	6	Display Null Code	As Nulls	As Spaces
	7	Cursor Attribute	Steady	Blinking
	8	Display Personality Code	Display Character	Display Space

Table 2-2. Data Interface Connector Pin/Signal List

CONNECTOR	PIN NO.	SIGNAL FUNCTION	TTY CODE
MODEM J3	1	Equipment Ground (GND)	AA
	2	Transmit Data (XMIT)	BA
	3	Receive Data (RCV)	BB
	4	Request to Send (RTS)	CA
	5	Clear to Send (CTS)	CD
	6	Data Set Ready (DSR)	CC
	7	Signal Ground (GND)	AB
	8	Carrier Detect (DCD)	CF
	12	Secondary Carrier Detect (SCF)	SCF
	19	Secondary Ready to Send (SCA)	SCA
	20	Data Terminal Ready (DTR)	CD
AUXILIARY J4	1	Equipment Ground (GND)	AA
	2	Receive Data (RCV)	BB
	3	Transmit Data (XMIT)	BA
	6,8	Request to Send (RTS)	CA
	7	Signal Ground (GND)	AB
	19	Clear to Send (CTS)	CB
	20	Data Terminal Ready (DTR)	CD

Table 2-2. Data Interface Connector Pin/Signal List (cont'd)

CONNECTOR	PIN NO.	SIGNAL FUNCTION	TTY CODE
EXTENSION J5	1	Equipment Ground (GND)	AA
	2	Receive Data (RCV)	BB
	3	Transmit Data (XMIT)	BA
	6,8	Request to Send (RTS)	CA
	7	Signal Ground (GND)	AB
	19	Clear to Send (CTS)	CB
	20	Data Terminal Ready (DTR)	CD

2.7 INSTALLING THE ADM-31

CAUTION

Be sure the bubble packing has been removed from the interior of the electronic unit. Damage to the equipment may result if not removed.

To install the ADM-31, proceed as follows:

1. Connect the data interface cable to the terminal using the appropriate information from Table 2-2.

2. Check the ON/OFF switch to ensure it is in the OFF position.

3. Plug the terminal into a grounded AC outlet of the proper voltage.

4. Set the appropriate BAUD RATE switch (see Figure 1-5) to the desired baud rate.

5. Set the configuration control switches (see Figure 1-5) to the positions desired to control the terminal characteristics summarized in Table 2-1.

6. Proceed to turn on the terminal (refer to Section 3).

2.8 CARE OF THE ADM-31 TERMINAL DISPLAY

This portion of the manual provides the required operator instructions pertaining to routine maintenance for the ADM-31 Data Terminal Display. Preventive maintenance procedures are limited primarily to cleaning and inspection steps.

2.8.1 Cleaning

At periodic intervals, clean the exterior housing and lightly dust the unit using a soft brush or damp lint-free cloth. However, paper towels may be substituted if desired. Remove smudges from the CRT exterior screen and the housing with conventional spray cleaners or alcohol. Do not use petroleum base cleaners, such as lighter fluid, as this could be harmful to the painted surface. Be careful not to scratch the CRT screen, and do not use freon cleaners.

2.8.2 Inspection

Periodically, inspect switches and keyboard assembly for freedom of movement. Determine that the intensity of character trace on the CRT screen has not diminished. Any required mechanical and electrical adjustment shall only be preformed by an authorized Lear Siegler service representative.

SECTION 3

OPERATING INSTRUCTIONS

3.1 INTRODUCTION

The purpose of this section is to describe how to use the ADM-31 Data Display Terminal. The terminal is used to enter, display, and send information to a remote computer or modem, printer, terminal or other auxiliary device, and to receive and display information from the computer or modem.

3.2 KEYBOARD FUNCTIONS

The operator uses a keyboard that resembles the keyboard of a conventional typewriter to enter data. Information typed by the operator may be displayed on a cathode ray tube (CRT) immediately, as during full-duplex operation, or as an echo from the remote computer, as during full-duplex operation. All or part of the display can be changed by the operator (text editing), or from the remote computer. This allows updating of information and quick, clean corrections of typing errors.

Figure 3-1 shows the keyboard layout of a standard ADM-31 Data Display Terminal. Many of the keys control several operations, depending on how they are used in combination with other keys on the terminal. Table 3-1, in conjunction with the paragraphs which follow, list and describe in detail operator keyboard operations. Those special operations beyond those associated with conventional typewriter key operations are described in detail under Programming Considerations in this section.

Except for a number of special operation keys, the keyboard is equipped with key roll-over protection (i.e., each key which is pressed must be released before the next key code can be produced).

The keyboard contains the following functional keys:

- Terminal control keys
- Lower and upper case alpha characters

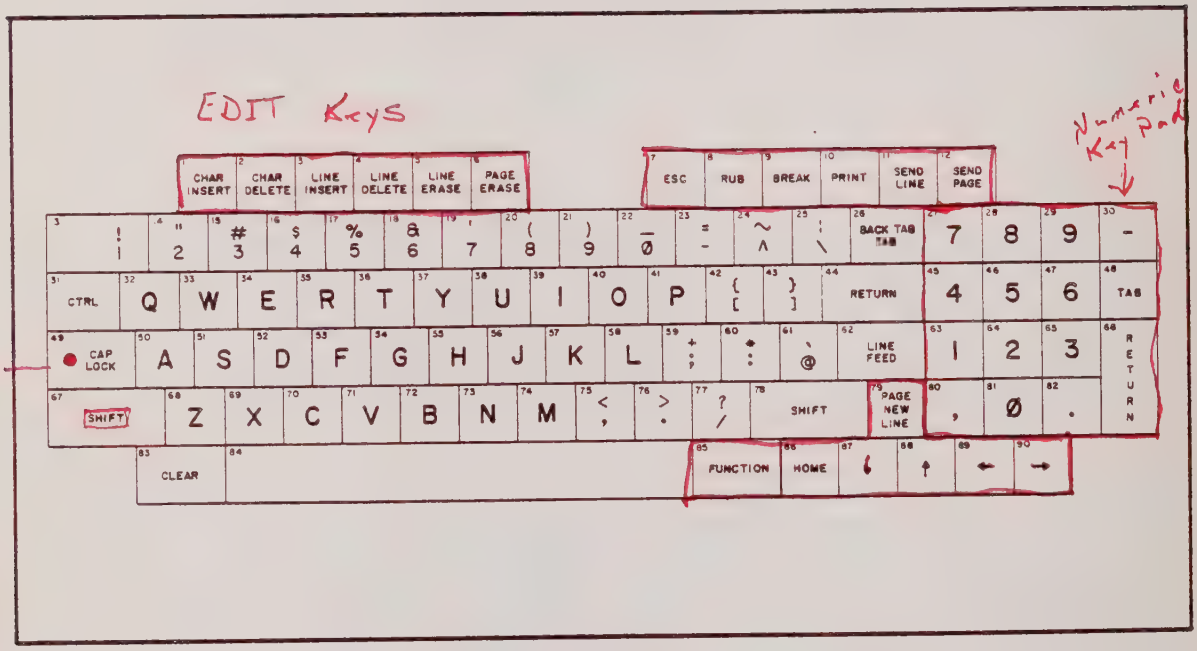

Figure 3-1. ADM-31 Data Display Terminal Keyboard

- Numeric characters on main and auxiliary keyboards
- Numeric characters with SHIFT (main keyboard only)
- Special characters
- Special characters with SHIFT
- Operational control keys
- Operational control keys with SHIFT

3.2.1 Terminal Control Keys

The SHIFT key is similar to the shift key of a conventional typewriter (refer to Table 3-1, Item 7). The key is used to produce shifted ASCII codes associated with upper case alpha characters (A to Z) and with the upper symbols of keys capable of producing two different symbols. No character is produced when the SHIFT key is operated. When used in conjunction with special operation keys (ESC, CHAR INSERT, etc.) the SHIFT key causes shifted ASCII codes to be produced, thus giving rise to alternate functions.

The CAP LOCK key allows the operator to type a series of shifted alpha characters (but not shifted numeric or special characters) continuously, without using the SHIFT key. Pressing the CAP LOCK key sets the CAP function and lights a lamp in the key. Pressing CAP LOCK a second time releases the function and extinguishes the lamp. No character is produced when CAP LOCK is pressed.

The space bar produces an ASCII space code to be produced and stored in memory for transmission. A space character (blank) also appears on the CRT display.

3.2.2 Alphanumeric Keys

The alphanumeric keys (refer to Table 3-1, Items 1, 2, and 3) are used to write any of the standard ASCII characters shown in ascending ASCII sequence in Figure 1-3. Pressing any alpha (A to Z) or numberic (0 to 9) key produces the ASCII 7-bit binary code associated with the unshifted character. When used in conjunction with the SHIFT key, the ASCII code is shifted to that associated with the upper case character on an alpha (A to Z) key and the upper symbol on a double-operation key. Such keys include main keyboard numeric keys (which are double-operation keys) but not auxiliary keyboard keys (0 to 9 and special characters TAB-,.). The auxiliary (numeric) key pad is mainly for convenience when performing a large number of numeric entries. The arrangement of these keys facilitates making the numeric entries, as opposed to using the main keyboard keys.

Table 3-1. Keyboard Operations

CONTROL	PAR. REF.	FUNCTION
1. Alphabet Keys	3.2.2	Lower case a to z
2. Alphabet, with SHIFT or CAP LOCK	3.2.2	Upper case A to Z
3. Numeric (Main and Numeric Keyboards)	3.2.2	Numerals 0 to 9
4. Numeric (Main Keyboard) with SHIFT	3.2.2	Special Characters: _!"#$%&'()
5. Special Character (Main and Numeric Keyboards)	3.2.3	Special Characters -^\]\[;:@,./
6. Special Character (Main Keyboard) With SHIFT	3.2.3	Special Characters =~|}{ +*`> < ?
7. Terminal Control:		
CAP LOCK	3.2.2	Locks/unlocks keyboard CAP status
SHIFT	3.2.2	Lower/upper case alpha characters; special characters and operations
Space Bar	3.2.2	ASCII space code in memory; space character on CRT screen
8. Cursor Control:	3.3	
TAB SHIFT/BACKTAB		Slew cursor to next tab forward/backward (Protect Mode Only)
HOME		Cursor to HOME position
↑ ↓ ← →		Increment up, down, left, right
RETURN		Left margin, same line
LINE FEED		Same column, next line
NEW LINE		Left margin, next line

Table 3-1. Keyboard Operations (cont'd)

CONTROL	PAR. REF.	FUNCTION
9. Data Editing Control:	3.4	
CHAR INSERT		Insert space character under cursor
CHAR DELETE		Delete character under cursor
LINE INSERT		Insert line following cursor
LINE DELETE		Delete line containing cursor
LINE ERASE		Erase line containing cursor to spaces
SHIFT/LINE ERASE		Erase line containing cursor to nulls
SHIFT/CLEAR		Clear screen to unprotected spaces
SHIFT/NEW PAGE		Recall and display "other" page
10. Data Transmission Control:	3.5	
SEND PAGE		Send foreground data on page
SHIFT/SEND PAGE		Send message on page
SEND LINE		Send foreground data on line containing cursor
SHIFT/SEND LINE		Send all data on line containing cursor
PRINT		Send all displayed data to printer in Print Format Mode
CONTROL/PRINT		Same as PRINT
BREAK		Sends BREAK code to computer

Only alpha numeric key-operations are shifted by means of the CAP LOCK key. Numeric key operations (on main and auxiliary keyboards), as well as all special character key operations are not functionally affected by the CAP LOCK key. Typically, the ASCII code produced by an alpha numeric key closure represents simply the character typed. Thus, a typed y, Y, or 7 represents a y, Y, or 7. When preceded by a CTRL, ESC, or FUNCTION code, however, the resulting ASCII code has an entirely different significance, depending upon which special operation has been selected. These special operations are described under Programming Considerations.

3.2.3 Special Character Keys

Functionally similar to the alpha numeric keys, the special character keys (shifted and unshifted) when used in the fashion of a conventional typewriter, produce ASCII codes which express the symbol on the key (refer to Table 3-1, Items 5 and 6). Also, as for alphanumeric key operations, a CTRL, ESC, or FUNCTION code preceding the special character causes the resulting ASCII code to have special programming significance, as described under Programming Considerations.

3.2.4 Operational Control Keys

The keyboard contains a number of operational control keys which are used unshifted or shifted to provide specific machine operations. These keys consist of those keys not previously categorized as alphanumeric and special character keys (Items 1 through 6, Table 3-1) with the exception of the ESC, CTRL, and FUNCTION keys. For the purpose of this discussion the operational control keys have been grouped according to specific operations, each of which is discussed in detail in the specified paragraphs, as follows:

- Terminal Control Operations (paragraph 3.2.1)
- Cursor Control Operations (paragraph 3.3)
- Data Editing Control (paragraph 3.4)
- Data Transmission Control Operations (paragraph 3.5)

3.3 CURSOR CONTROL OPERATIONS

The cursor is a bright rectangular marker on the ADM-31 screen that indicates the entry point for the next character to be displayed. As characters are entered, the cursor moves from left to right across the display. When the cursor is positioned over a character already displayed, that character appears as a reverse image in the cursor. Cursor positioning may be controlled from the keyboard or from the remote computer. Operational control of the cursor is accomplished by using appropriately labeled operational control keys (unshifted or shifted) on the keyboard.

The following operational control keys control cursor positon. In each instance, if the selected position is protected, the cursor moves along that line and to following lines, if necessary, to the first unprotected position. These operational control keys are for local terminal control only; hence do not generate ASCII codes for transmission.

- HOME — Moves the cursor to the first character position on the page (top line, most left-hand position), or to the first unprotected position. Always moves to page 1 if AUTO PAGE is set.
- ↓ — "Down Line" moves cursor to the same column of the next lower line.
- ↑ — "Up Line" moves cursor to the same column of the next higher line.
- ← — "Back Space" moves cursor one position to the left.
- → — "Fore Space" moves cursor one positon to the right.
- NEW LINE — Causes cursor to move to the first character position in the next lower line.

• TAB/BACK TAB	Dual operation key is operational only in Protect Mode. Moves cursor forward (unshifted) or backwards (shifted) to the next unprotected position on page. If there is no "next unprotected position": for TAB, cursor moves to HOME position or to first unprotected position following HOME; for BACK TAB, cursor moves to end of page.
• RETURN	Moves cursor to first character position in the line in which cursor rests.
• LINE FEED	Moves cursor to the same column of the next lower line.

3.4 DATA EDITING CONTROL OPERATIONS

The ADM-31 Data Display Terminal is equipped with complete data editing capabilities, either from the keyboard or computer. Editing using the computer is typically under the control of or is performed by a programmer; these operations are discussed under Programming Considerations. At the keyboard, the operator may use appropriately labeled special editing keys to accomplish the following editing activities:

- Character type-over
- Clear unprotected positions to spaces or nulls
- Clear entire screen to spaces or nulls
- Character insert/delete
- Line insert/delete
- Erase to end of line or field (space or personality)
- Erase to end of page (space or personality)
- Page change (forward/back)

The following special operation keys are used for data editing:

- CHAR INSERT moves character under cursor and all following characters one position to the right. If no protected field is encountered on the line, the operation terminates at the end of the line, and the last character on the line is lost (if the line is full). A space character is written under the cursor.

- CHAR DELETE deletes character under the cursor. All characters that follow in the field or line move one position to the left and fill the space left by the deletion. A space is written in the last character position of the field or line.

- LINE INSERT. Depressing the LINE INSERT key causes the entire line where the cursor is located and all lower lines, to shift downwards one line. This creates an empty line of unprotected spaces on which additional characters may be entered. If the entire page is filled when creating this new line, the bottom line is erased, unless AUTO PAGE is set; then line 24 of page 1 is moved to line 1 of page 2. The cursor moves to the first position of the new blank line. If in Write Protect mode, LINE INSERT resets that mode. If in Protect Mode, operation is not performed.

- LINE DELETE. Depressing the LINE DELETE key causes the entire line on which the cursor is located to be erased. Simultaneously, all lower lines shift upwards one line. The cursor moves to the first character position of the first line (that moves upwards). The bottom line is filled with unprotected spaces. If AUTO PAGE is set, line 1 of page 2 will move to line 24 of page 1. If in Protect Mode, operation is not performed.

- LINE ERASE erases all characters, beginning with the cursor position, through the end of the line field that contains the cursor. Erased characters are replaced with space or personality codes. If operating in the Write Protect Mode, space or personality codes are written unprotected.

- PAGE ERASE erases all unprotected characters, starting at the cursor position and progressing through to the end of the data on display. Erased characters are replaced with space or personality codes.

- CLEAR operates only in combination with the SHIFT key to erase data from the CRT screen and from memory to space or personality codes. If operating in Protect Mode, only unprotected data will be erased.

- NEW PAGE is the upper function of the dual-purpose PAGE/NEW/LINE special operation key. Which means that the SHIFT key must be pressed in order to initiate the NEW PAGE operation. Each time NEW PAGE is keyed, the alternate or "other" page in memory is called up on the screen, and the "old" page is stored. Changes made to the page on display are retained when stored. Thus, two complete pages of data can be alternately displayed and edited, then stored.

3.4.1 Editing Examples

In some installations, depending on the manner in which the ADM-31 is used, editing is an important consideration. Operators wishing to gain full use of the instrument's editing capabilities must become familiar with the operation of the keys listed above.

The following examples provide practice in the use of the editing keys:

NOTE

It should not be construed from these examples that the method presented is the only method of making the required editorial changes. Other steps can be taken that produce the same end result.

Table 3-2 is an example of formatted (protected and unprotected) data entry errors (unedited response) that are easily corrected, before sending the data to the remote computer. (The lines are numbered for illustrative purposes only, to refer to them in explaining how corrections are made.)

The operator reviews the data on display and corrects errors as follows:

Line 1. Press the HOME key. Cursor moves to the "D" position. Type R, and note that R replaces the D.

Table 3-2. Editing Example

QUERY	CORRECT RESPONSE	UNEDITED RESPONSE
1. Description:	Reclining Chair	Declining Chair
2. Stock No:	RCB01887-04L	RCB0187-04L
3. Quantity:	1	1
4. Price:	369.95	$369.95
5. Sales Tax:	22.20	22.19
6. Total Amount:	392.15	392.14
7. Clerk No:	23	23

NOTE

If cursor does not move to the "D" position when the HOME key is pressed, the terminal is probably not operating in the Protect Mode. Refer to paragraph 3.7.4 to place the terminal in the Protect Mode.

Line 2. Press the LINE FEED key. Press the → key as necessary to place the cursor over the 8. Press the CHAR INSERT key, and note that everything on this line to the right of the cursor moves one space to the right. Type 8 to correct the error.

Line 4. Press the TAB key twice to move the cursor over the $ symbol. Press the CHAR DELETE key, and note that $ is erased and all characters on this line shift left one space to correct the error.

Line 5. Press the NEW LINE key, and note that cursor moves over the first "2" on line 5. Press the → key to move the cursor over the "1". Type 20 to correct this entry.

Line 6. Press the ↓ key, and note that cursor moves straight down to line 6. Press the → key as necessary to move the cursor over the 4. Type 5 to correct the error.

In the following example, the first paragraph shows a partial page as it should have been prepared. The lines are numbered for purposes of illustration only, to simplify referencing to specific lines in subsequent paragraphs that show how the copy was actually prepared (second paragraph), and how the copy was corrected.

Correct Copy

```
1. Some of the basic decisions in the $4.8 billion sales, which
2. can be blocked by Congress, were taken months ago and were no
3. surprise to observers of U.S. Middel East policy.  But
4. timing of the announcement, capping a week of mutual U.S.
5. Israel recriminations and a high visibility Egyptian diplo-
6. matic offensive, almost seemed calculated to heat the atmos-
```

Unedited Copy

```
1. Some of the basic in the $4.8 billion sales, which can be
2. blocked by Congress, were taken months ago and were no sur-
3. timing of the announcement, capping a week of mutual U.S.
4. surprise to observers of U.S. Middle East policy.  But the
5. Israel recriminations and a high-visibility Egyptian diplo-
6. matic offensive, almost includes some of the most sophisti-
```

The following corrections are based on the assumption that CLEAR SCREEN TO NULLS escape sequence (ESC:) was issued before any typing was done on the page containing these lines.

Line 1. Move the cursor to the space between "basic" and "in". (Use the HOME and → keys.) Use the CHAR INSERT key to provide 10 additional spaces between "basic" and "in". (Nine spaces for "decisions", plus an additional required space.) Press the "space" bar; then type the word that was omitted: decisions. Move the cursor over the "c" in "can"; then press the LINE ERASE key. Note that "can be" is erased.

Line 2. Move the cursor over the "b" in "blocked". Press the CHAR INSERT key seven times, and note that all characters in the line move to the right. Type "can be" in the space just created. Move the cursor over "s" of "sur-"; then press the LINE ERASE key. Note that "sur" is erased.

Line 3. Move the cursor to the third line. Press the LINE DELETE key. Note that this line and all successive lines move up the page, thereby correcting line 3.

Line 4. Move the cursor to the new fourth line on the display. Press the LINE INSERT key. Note that this line and all successive lines move down the page, creating a new line in which information may be typed. Type the appropriate copy in line 4.

Line 6. Move the cursor to line 6 and position it over the "i" of "includes". Press the LINE ERASE key and note that everything from the position of the cursor to the end of this line is erased. Correct this line by typing the appropriate information.

NOTE

An alternate way of making corrections that involve making erasures, such as in line 6, is simply to write over the unwanted material. Replacing old material with new material is an automatic erasure.

3.5 DATA TRANSMISSION CONTROL OPERATIONS

Data which has been displayed on the CRT screen (and automatically stored in memory) may be transmitted to a remote computer. Modes of transmission include the block mode, conversation mode, print mode, and polling mode. As described in Section 2 of this manual, the ADM-31 Data Display Terminal is set up for Block Mode or Conversation Mode operation at installation by setting SW 7 in Switch Bank No. 1 in the appropriate position. The alternate mode of transmission may be "permanently" selected by SW 7 or temporarily by a locally initiated or computer initiated escape sequence. The methods of effecting these escape sequences are described under Programming Considerations.

3.5.1 Transmission (Baud) Rates

The ADM-31 operates with a variety of computers, and sometimes communicates with the computer over telephone data lines. These conditions require different transmission (baud) rates from one installation to the next. Using the BAUD RATE switches at the rear of the terminal (see Figure 1-5), it is possible to select a data transmission rate of 50, 75, 110, 134.5, 150, 300, 600, 1200, 1800, 2000, 2400, 3600, 4800, 7200, 9600 baud, depending upon the installation requirements.

3.5.2 Block Mode Transmission

In the Block Mode, information is transmitted and received as complete messages or blocks of data (compared with character-by-character transmission in Conversation Mode). The operator enters the complete message, up to two full screens in length. The characters are displayed and stored, but are not automatically transmitted. After the message has been completed, the operator can edit the information, then use a SEND PAGE or SEND LINE special operation key which causes all or part of the message to be transmitted. Refer to Programming Considerations for programmer-type information concerning the character codes associated with these operations and the special SEND MESSAGE operation.

The following special-operation keys are used for Block Mode transmission:

- SEND LINE causes transmission of unprotected information starting at the beginning of the line in which the cursor is located and continuing to the position the cursor was in when SEND LINE was keyed. Pressing SEND LINE while pressing the SHIFT key causes <u>all</u> characters in the line containing the cursor (up to cursor position) to be transmitted. Protected data is bracketed by "ESC)" and "ESC(".

- SEND PAGE causes transmission of unprotected characters in the displayed page, starting with the first unprotected character and continuing to the position the cursor was in when SEND LINE was keyed. Pressing SEND PAGE while pressing SHIFT causes the unprotected characters in message between FS characters on the page to be transmitted. If AUTO PAGE is set, the message on both pages will be sent.

3.5.3 Example of Block Mode Transmission

In this Block Mode example, the ADM-31 is located at the cashier's stand in a furniture store. For each sale, the cashier fills out a form on the CRT screen. This action notifies the central computer of a change in inventory level and provides accurate inventory control.

1. The operator presses the FUNCTION key; and then types b. In this example, the two keys produce a code (SOH b CR) which notifies the central computer of a retail sale. (Code does not appear on the screen.)

2. The computer recognizes the code and responds with the following form in protected characters:

   DESCRIPTION:
   STOCK NO:
   QUANTITY:
   PRICE:
   SALES TAX:
   TOTAL AMOUNT:
   CLERK NO:

3. The display is in the Protect Mode with the cursor in the space following DESCRIPTION. The cashier fills out the form. After each entry, she presses the TAB key, which positions the cursor to the first unprotected space following the next protected field--in this case, the space after the next item on the form.

   DESCRIPTION: SOFA BRN (TAB)
   STOCK NO: 01552 (TAB)
   QUANTITY: 1 (TAB)
   PRICE: 249.95 (TAB)
   SALES TAX: 12.50 (TAB)
   TOTAL AMOUNT: 262.45 (TAB)
   CLERK NO: 25

4. After completing the last entry on the form, the cashier operates the SEND PAGE key, which transmits the unprotected data (the cashier's entries only) to the central computer, in the following format: FS SOFA BRN US FS 01552 US FS 249.95 US....etc.

5. The computer then responds with an acknowledgement of message received, and clears the display.

3.5.4 Conversation Mode Transmission

In the Conversation Mode, information is transmitted character by character, as it is typed. The mode is typically used for interactive communication with the computer, where dialog with the computer is desired. Data will be transmitted either HALF DUPLEX or FULL DUPLEX, depending upon the setting of SW 8 of Switch Bank No. 1 within the terminal (see Figure 1-5). During Conversation Mode transmission, execution of a command sequence either from the keyboard or the computer will cause the appropriate action at the terminal, but no control codes will be transmitted.

In the HALF DUPLEX mode of operation, information can be sent to or received from the computer, but in only one direction at a time. Characters are transmitted and displayed one character at a time, as they are typed. Received characters are displayed as they are received. In the FULL DUPLEX mode of operation, information can be transmitted and received simultaneously. Characters are transmitted one character at a time as they are typed, but are displayed on the CRT only when they have been echoed back from the computer. Received characters are displayed as they are received. All keyboard operations are transmitted as ASCII characters except the following: CHAR INSERT, CHAR DELETE, LINE INSERT, LINE DELETE, LINE ERASE, PAGE ERASE, PRINT, SEND LINE, SEND PAGE, BACK TAB, and SHIFT/FUNCTION.

3.5.5 Example of Conversation Mode Transmission

In this Conversation mode example, the remote computer is running a conversational program instructing the operator in the use of the BASIC programming language. The computer asks a multiple-choice question which requires an operator response.

Computer: Before we can have the computer work with data, we must have the data read in with a statement.
(1. Read 2. Print 3. Data 4. None of these)

Operator: 1

Computer: Correct

Computer: All data that is read in using a read statement must appear in some statment.
(1. Input 2. Print 3. Data 4. None of these)

Operator: 1

Computer: Incorrect. The correct answer is 3. The input statement is similar to the read statement, but calls for the input to be made from the ADM-31 rather than from the data statements.

.....And so on.

3.5.6 Print Mode Transmission

Print Mode transmission requires a Serial Printer Interface installation as described in Section 2 of this manual. The interface can be used with most RS-232-C compatible series printers, including buffered printers, as well as character-by-character printers. With this interface, the information input

from the computer is buffered to make it available for editing and additions from the terminal prior to printing. In addition, the printer can be operated at any one of the transmission baud rates listed in paragraph 3.5.1. The Print Mode can be initiated from the keyboard using the PRINT key, or CTRL/PRINT keys. The Print Mode can also be entered by means of an escape sequence initiated from the keyboard or the remote computer. Using the PRINT key or the CTRL/PRINT keys, data can be sent to the printer in page format. A Free Form Mode is available via an "ESC L" sequence. An additional buffered Print Mode is available via an "ESC A" sequence.

In either the page format or free form mode, data is transmitted continuously as long as the printer and the terminal are ready. These conditions are monitored to provide printer/terminal control in the following manner (see Figure 2-2):

1. The serial printer interface is enabled by setting SW 2 of Switch Bank No. 4 (see Figure 1-5) to the ON position, this enabling the CLEAR TO SEND line.

2. When the terminal is ready to transmit data, REQUEST TO SEND (RTS) is sent to the printer.

3. If the printer is ready, it signals not BUSY over the CLEAR TO SEND (CTS) line, which alerts the terminal. Depending upon which printer is selected, CTS (NOT BUSY or READY) may be active when high or low. SW 2 and SW 3 of Switch Bank No. 4 are provided to accommodate each style printer. SW 2 must be ON to allow external printer control. Then, if SW 3 is ON, BUSY (NOT READY) is active low; if OFF, BUSY (NOT READY) is active high.

Print Format Mode allows data to be printed exactly as displayed on the CRT screen. Transmission is initiated by pressing the PRINT key or CTRL/PRINT keys at the desired print operation stopping position. (Print Format Mode can also be entered via a keyboard-initiated or computer-initiated "ESC P" sequence). The following takes place:

1. The control character GS is written at the cursor position as a STOP code.

2. The cursor is moved to the HOME position.

3. The code sequence CR LF NULL is sent to the printer, followed by the data displayed on the screen.

4. NULL characters and trailing spaces on a line are not sent. When the last character on each line is sent, the terminal send the CR LF NULL sequence before moving to the next line.

5. Upon reaching the STOP code, the operation is terminated, a final CR LF NULL is sent, and the STOP code (GS) is overwritten with a space.

NOTE

A STOP code within the text will cause the printing to stop at that point.

6. Breaks in the transmission may occur to allow for mechanical printer operations or other delays, by means of the printer READY logic described above. If the printer goes BUSY upon receipt of a control character (CR, LF, etc.) that character should be followed by one or two RUB out characters to ensure that no data will be lost. The keyboard BREAK key may also be used to interrupt transmission for as long as the key is held depressed.

Free Form Format Mode transmits a continuous stream of data without inserting control characters and without internal ADM-31 delays. This mode allows greater flexibility in formatting the printed copy, especially with printers having other than 80-character lines. Transmission is initiated via keyboard-initiated or computer-initiated "ESC L" sequence. The following operations take place:

1. The control character GS is written at the cursor position as a STOP code.

2. The cursor is moved to the HOME position and transmission begins.

3. Line control characters (CR, LF, etc.) are not inserted at the end of each ADM-31 display line; transmission continues without delay from line to line, until STOP code (GS) is reached. STOP code is overwritten.

4. NULL characters on the screen are sent to the printer, and all trailing spaces are transmitted.

5. Control codes for print formatting may be embedded in text using local or remote escape, CTRL, or FUNCTION sequences, but only while the terminal is in Program Mode. Such control codes include: CR, LF, FF, VT, BEL, ESC, BS, FS, GS, RS, and US.

6. Breaks in the transmission may occur to allow for mechanical printer functions or other delays, by means of the printer BUSY logic described above. If the printer goes BUSY upon receipt of a control character (CR, LF, etc.) that character should be followed by one or two RUB out characters to ensure that no data will be lost. The keyboard BREAK key may also be used to interrupt transmission for as long as the key is held depressed.

3.5.7 Buffered Print Mode Transmission (refer to Programming Considerations)

3.5.8 Polling Mode Transmission (Future)

3.6 PROGRAM MODE

Program Mode is a mode of operating the terminal typically used for establishing non-standard text formats for transmission. In Program Mode, characters are written in memory (and displayed) in a continuous stream, without internal delays. Control characters (CR, LF, FS, etc.) are written as they are keyed, and the appropriate symbols are displayed. For example, CR, LF, and FS would be displayed: C_R L_F F_S. Program Mode may be initiated from the keyboard by using ESC U, and terminated by ESC X or ESC u. Program Mode may also be initiated and terminated by the remote computer using the ESC U and ESC X (ESC u) ASCII codes.

3.7 PROTECTED FIELDS/CHARACTERS

Areas on the ADM-31 display may be designated by the operator or by the computer as protected fields. These fields appear at reduced intensity and have the following characteristics:

1. Protected fields cannot be typed over as long as the terminal is operating in the Protect Mode.

2. Forms appearing on the display initiated by the computer are usually in protected characters.

3. Protected fields cannot be overwritten by the remote computer unless the ADM-31 is first removed from the Protect Mode.

3.7.1 Designated Protected Fields

The operator has complete control over any character that he types on the CRT screen. Consequently, he may elect at any time to protect or to leave unprotected any character (or field of characters) that he, and not the computer, originates. To type protected characters, it is necessary to be in the Write Protect Mode of operation. This mode is entered from the keyboard by keying "ESC"), and terminated by keying "ESC (". Characters typed while in this mode may then be protected during operation by establishing a Protect Mode condition. From the keyboard, enter "ESC &" to set Protect Mode, and "ESC'" to terminate Protect Mode. Write Protect and Protect Mode may be initiated or terminated by the remote computer by performing the same escape sequences referred to above. (Refer to Programming Considerations for details.)

3.7.2 Selected Protected Field

The (` ) character may be used to establish a special protected field in which characters which have been written protected will be transmitted along with unprotected characters in a message. While operating in Write Protect Mode a (`)character will establish the field and another (` ) character will terminate the field. Any characters bracketed by the (`) character will thus be transmitted as though unprotected during a SEND LINE, SEND PAGE, or SEND MESSAGE routine, except that the bracketed field will not be erased after being sent.

The following is an example of this special operation:

1. Assume that the terminal is in Write Protect Mode.

2. The operator enters a combination of protected (P) characters, specially protected (p) characters, and unprotected (U) characters, as follows:

   PPP ` ppp UU ppp` PPP UU

3. The terminal is then placed in Protect Mode to protect the entire field.

4. If SEND LINE, SEND PAGE, or SEND MESSAGE is commanded, the following will be transmitted; only the final "UU" characters will be erased.

   ppp UU ppp UU

The special protected field is cleared along with and in the same manner as any other protected field.

3.7.3 Write Protect Mode

The Write Protect Mode of operation is established as follows:

1. Momentarily press the ESC key.
2. Press and hold down either SHIFT key.
3. While holding SHIFT depressed, mementarily press the) key.
4. To get out of the Write Protect Mode, press momentarily the ESC key.
5. Press and hold down either SHIFT key; then momentarily depress the (key.

3.7.4 Protect Mode

The Protect Mode of operation is established as follows:

1. Momentarily depress the ESC key.
2. Depress and hold down either SHIFT key.
3. While holding SHIFT depressed, momentarily depress the & key.
4. To get out of the Protect Mode, momentarily press the ESC key.
5. Press and hold down either SHIFT key; then momentarily depress the ' key.

3.8 REAR PANEL CONTROLS

Rear panel controls for the ADM-31 are illustrated in Figure 3-2 and discussed in terms of function in Table 3-3.

3.9 TURN-ON AND TURN-OFF PROCEDURES

Turn-on of the ADM-31 is accomplished by complying with the following steps:

1. Set the ON/OFF switch on the rear of the ADM-31 to the ON position.
2. Note that in approximately 20 seconds after power turn-on, the cursor appears at the HOME position, and the rest of the screen is clear.

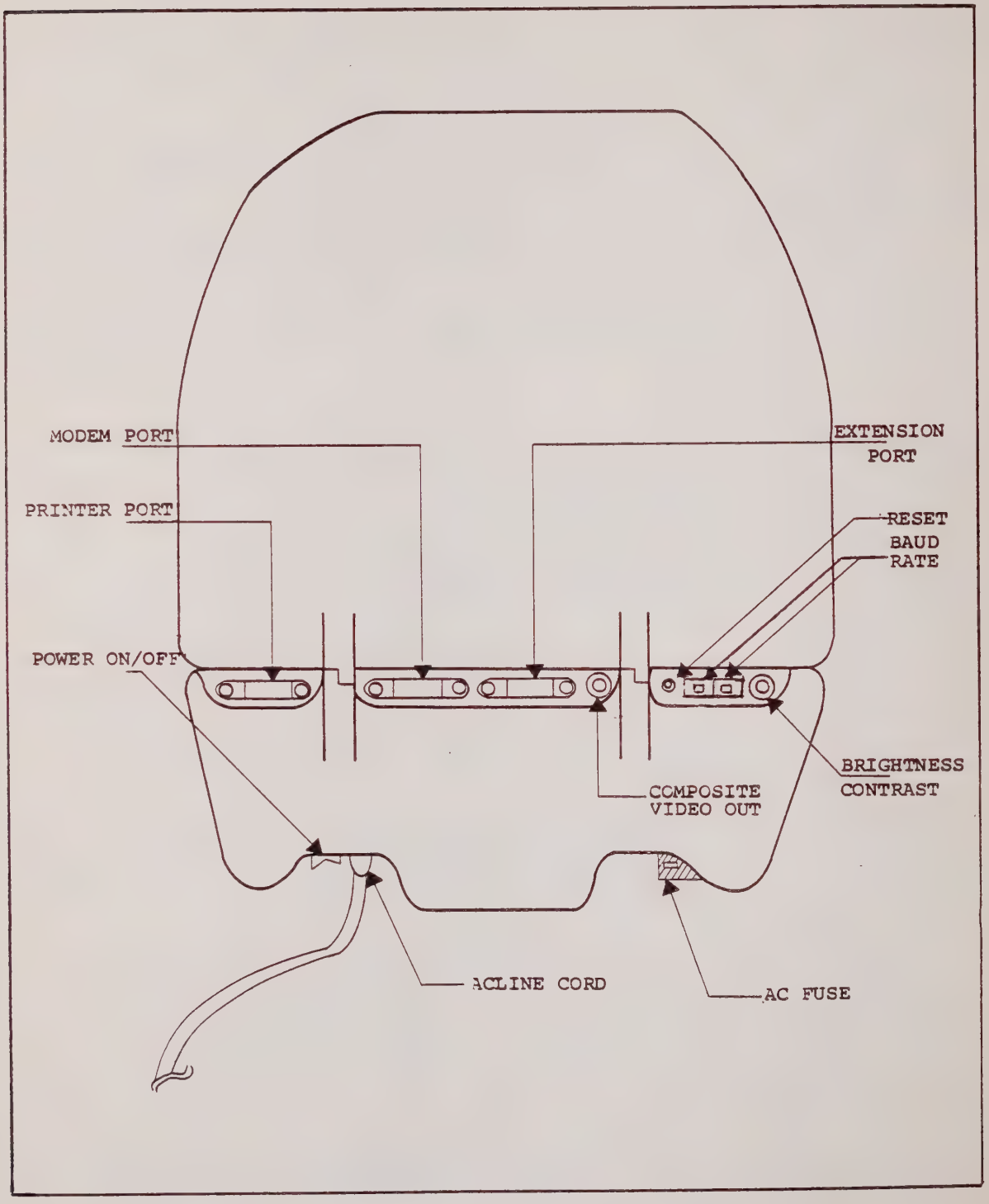

Figure 3-2. ADM-31 Rear Panel Control Location

Table 3-3. ADM-31 REAR PANEL CONTROLS

CONTROL	OPERATIONAL DESCRIPTION
ON-OFF Power Switch	This two position switch controls the AC power to the unit and certain power-up and power-down sequences. Setting the switch to the ON position resets the circuitry within the ADM-31, positions the cursor to home, and clears the display memory to unprotected nulls.
BRIGHTNESS Control	This potentiometer controls the overall brightness of the CRT display. Brightness is usually adjusted so the display raster (background) is barely visible or just below the point of visibility.
CONTRAST Control	This potentiometer controls the character brightness relative to the background. Contrast is usually adjusted after the brightness control.
BAUD RATE SWITCH (PRINTER and MODEM)	This 15 position switch controls the printer and main I/O baud rates. The rates are as follows: Position 0 = 50, 1 = 75, 2 = 110, 3 = 134.5, 4 = 150, 5 = 300, 6 = 600, 7 = 1200, 8 = 1800, 9 = 2000, 10 = 2400, 11 = 3600, 12 = 4800, 13 = 7200, 14 = 9600.
MODEM PORT	This is the main I/O port which outputs data to and inputs data from the remote data source. The main Some RS-232C pins are used for the current loop interface.
AUXILIARY (optional)	This connector is used for the serial printer interface option. It allows the ADM-31 display terminal to control an auxiliary serial printer to make a permanent copy of information displayed on the screen.
EXTENSION PORT	This bidirectional interface operates at RS-232C logic levels and allows daisy chaining additional ADM-31 terminals and connection of a serial EIA auxiliary device such as a printer to the terminal. A 25 pin connector (AMP # 205208-1 or equivalent) is used for attaching auxiliary devices.
RESET	This switch performs the same function as power up restart. NOTE: Any data on the screen and in memory will be erased.
COMPOSITE VIDEO (optional)	When installed, the ADM-31 provides a composite video output capable of driving a remote video monitor up to 1000 feet from the terminal. A Sealectro type 51-153-0000 connector is provided on the rear of the terminal.

3. If the cursor does not appear after the warm-up period, momentarily press the HOME key. If this fails to produce the cursor, it is possible that the BRIGHTNESS and/or the CONTRAST controls are misadjusted. If this condition exists, set the CONTRAST control clockwise until the background is barely visible. The cursor should be present.

Turn-off of the ADM-31 is accomplished as follows:

If the terminal contains information that must be retained, be sure to transmit this information immediately to the remote computer. This is necessary as the display memory is cleared when the AC power switch is set to ON. As an alternate measure, print the information prior to turning off the terminal.

Turn-off the ADM-31 by setting the AC power switch to OFF.

3.10 PROGRAMMING CONSIDERATIONS

The ADM-31 contains electronic circuitry which allows the remote computer full control over the data terminal. All control operations which are possible from the keyboard can also be executed from the computer. At the keyboard these control operations are initiated and/or terminated by using the CRTL, ESC, and FUNCTION keys in combination with one or more alpha numeric or special operation keys. The coding thus produced duplicates the coding required or produced by the computer; the discussion that follows, however, focuses on the methods of producing the codes using keyboard procedures. The types of special control operation available, together with the coding required, are listed in Table 3-4, and discussed as required in paragraphs 3.10.1 through 3.10.10.

3.10.1 CTRL Key Operations

The CTRL key is always used in combination with an alpha or special character key. Pressing the CTRL key modifies the ASCII code of the selected standard character to a special control operation code. Figure 3-3 shows a portion of the standard ADM-31 graphic set, along with the hex coding (columns 4 and 5) which identifies and locates the standard characters. Columns of 0 and 1 of the chart show 32 CTRL codes and the modified characters (symbols) produced by using the CTRL key; these symbols occupy the same relative positions in the columns as the standard keyboard characters they modify. Pressing the CTRL key will cause the CTRL code to be applied only to the terminal; no code would be transmitted to the computer. In Program Mode (refer to paragraph 3.6) the CTRL character to be transmitted to the computer will be written on the CRT screen as the character is keyed.

HEX			FUNCTION		GRAPHIC CHARACTER SET					
			0	1	2	3	4	5	6	7
	4321	765	000	001			100	101		
0	0000		NUL	DLE			@	P		
1	0001		SOH	DC1			A	Q		
2	0010		STX	DC2			B	R		
3	0011		ETX	DC3			C	S		
4	0100		EOT	DC4			D	T		
5	0101		ENQ	NAK			E	U		
6	0110		ACK	SYN			F	V		
7	0111		BEEP	ETB			G	W		
8	1000		(←) BS	CAN			H	X		
9	1001		(SKIP) HT	EM			I	Y		
A	1010		LF(↓)	SUB			J	Z		
B	1011		VT(↑)	ESC			K	[		
C	1100		FF(→)	FS			L	\		
D	1101		CR	GS			M	]		
E	1110		SO	(HOME) RS			N	∧		
F	1111		SI	(NEW LINE) US			O	-		

Figure 3-3. Chart of CTRL Key Sequence Characters, With HEX Coding

Table 3-4. Special Control Operations

CONTROL		PAR. REF.	OPERATION
1. CTRL or SHIFT/CTRL Operations:		3.10.1	
KEYS	DISPLAY		ASCII CODE (OPERATION)
CTRL @	space ( )		NULL (No Op)
CTRL a/A	S_H		SOH (Start of Heading)
CTRL b/B	S_X		STX (Start of Text)
CTRL c/C	E_X		ETX (End of Text)
CTRL d/D	E_T		EOT (End of Transmission)
CTRL e/E	F_Q		ENQ (Inquiry - who are you)
CTRL f/F	A_K		ACK (Acknowledge)
CTRL g/G	B_L		BEL (Audible Alarm)
CTRL h/H	B_S		BS (Back Space)
CTRL i/I	H_T		HT (Horizontal Tab)
CTRL j/J	L_F		LF (Line Feed)
CTRL k/K	V_T		VT (Vertical Tab)
CTRL l/L	F_F		FF (Forespace)
CTRL m/M	C_R		CR (Carriage Return)
CTRL n/N	S_O		SO (Shift Out)
CTRL o/O	S_I		SI (Shift In)
CTRL p/P	D_L		DLE (Data Link Escape)
CTRL q/Q	D_1		DC1 (Device Control 1)
CTRL r/R	D_2		DC2 (Device Control 2)
CTRL s/S	D_3		DC3 (Device Control 3)
CTRL t/T	D_4		DC4 (Turns Printer buffer off-line; Printer continues printing until buffer is empty.)
CTRL u/U	N_K		NAK (Not Acknowledged)
CTRL v/V	S_Y		SYN (Synchronous Idle)
CTRL w/W	E_B		ETB (End of Transmission Block)

Table 3-4. Special Control Operations (cont'd)

CONTROL	PAR. REF.	OPERATION
1. CTRL or SHIFT/CTRL Operations (cont'd)	3.10.1	
KEYS DISPLAY		ASCII CODE (OPERATION)
CTRL x/X C_N		CAN (Cancel)
CTRL y/Y E_M		EM (End of Medium)
CTRL z/Z S_B		SUB (Substitute)
CTRL [E_C		ESC (Escape Sequence)
CTRL \ F_S		FS (File Separator)
CTRL] G_S		GS (Group Separator)
CTRL ^ R_S		RS (Cursor HOME; always to page 1 if AUTO PAGE is set)
CTRL - U_S		US (New Line)
2. FUNCTION key Operations:	3.10.3	For special-character operations (primarily during CONV MODE) only.
KEYS USED		
FUNCTION/(Character)		Transmits SOH (character) CR.
SHIFT/FUNCTION/ (Character)		Duplicates Block Mode ESC functions (ESC code not transmitted).
3. Personality Control:	3.10.4	
KEYS OPERATION		DESCRIPTION
ESC. 0(HEX) ESC LEAD-IN		Replace escape lead-in character with (HEX) code.
ESC. 1(HEX) END BLOCK		Replace end of block character with (HEX) code.

Table 3-4. Special Control Operations (cont'd)

CONTROL		PAR. REF.	OPERATION
3. Personality Control (cont'd):		3.10.4	
KEYS	OPERATION		DESCRIPTION
ESC. 2(HEX)	2ND END BLOCK		Replace/add end of block character with (HEX) code.
ESC. 3(HEX)	NEW LINE		Replace new line character with (HEX) code.
ESC. 4(HEX)	2ND NEW LINE		Replace/add new line character with (HEX) code.
ESC. 5(HEX)	FLD SEP		Replace field separator character with (HEX) code.
ESC. 6(HEX)	FUN LEAD-IN		Replace FUNCTION key lead-in character with (HEX) code.
ESC. 7(HEX)	PAR ERR		Replace parity error replacement character with (HEX) code.
ESC. 8(HEX)	CLR/ERASE		Replace clear/erase replacement character with (HEX) code.
ESC. 9(HEX)	RESERVED		
ESC. A(HEX)	RTS OFF DELAY		Replace RTS off delay character with (HEX) code.

Table 3-4. Special Control Operations (cont'd)

CONTROL	PAR. REF.	OPERATION
3. Personality Control (cont'd):	3.10.4	
KEYS / OPERATION		DESCRIPTION
ESC o / DSPLY PERS		Display 3 rows of personality in HEX coding (clear screen to NULLS): 1st row - non variable options. 2nd row - default personality variable. 3rd row - current personality variable.
4. Terminal Control:	3.10.5	
KEYS / OPERATION		DESCRIPTION
ESC " / KBD ENA		Enables keyboard operations.
ESC # / KBD DISA		Disables all keyboard operations except reset. (RESET switch must be operated to restore keyboard.)
5. Cursor Control:	3.10.6	
KEYS / OPERATION		DESCRIPTION
ESC i / TAB ESC I / BACKTAB		Slew cursor to next tab forward/backward (Protect Mode only).
ESC - (*) / LOAD PRC		Load cursor page, row, column.

Table 3-4. Special Control Operations (cont'd)

CONTROL		PAR. REF.	OPERATION
5. Cursor Control (cont'd):		3.10.6	
KEYS	OPERATION		DESCRIPTION
ESC/	READ PRC		Read cursor page, row, column.
ESC= (*)	LOAD RC		Load cursor row, column.
ESC?	READ RC		Read cursor row, column.
NOTE: (*= YX Position)			Absolute cursor position.
CTRL h/H	BS		Backspace
CTRL i/I	HT		Horizontal tab
CTRL k/K	VT		Vertical tab
CTRL l/L	FF		Forespace
CTRL m/M	CR		Carriage return
CTRL	RS		HOME (always to page 1 if AUTO PAGE is set)
6. Format Control:		3.10.7	
KEYS	OPERATION		DESCRIPTION
ESC &	SET PROTM		Set Protect Mode.
ESC '	CLR PROTM		Clear Protect Mode.
ESC (	CLR WPROT		Clear Write Protect Mode.
ESC)	SET WPROT		Set Write Protect Mode.
ESC I	BACKTAB		Slew cursor backward to next tab.
ESC U	SET PGM MODE		Set Program Mode

Table 3-4. Special Control Operations (cont'd)

CONTROL		PAR. REF.	OPERATION
6. Format Control (cont'd):		3.10.7	
KEYS	OPERATION		DESCRIPTION
ESC X	CLR PGM MODE		Clear Program Mode.
ESC i	TAB		Slew cursor forward to next tab.
ESC u	CLR PGM MODE		Clear Program Mode.
ESC v	SET AUTO PG		Set auto page function.
ESC w	CLR AUTO PG		Clear auto page function.
CTRL @	NULL		No Op.
CTRL a/A	SOH		Start of heading
CTRL b/B	STX		Start of text.
CTRL c/C	ETX		End of text.
CTRL d/D	EOT		End of transmission.
CTRL w/W	ETB		End of transmission block.
CTRL y/Y	EM		End of message.
CTRL \	FS		File Separator.
CTRL]	GS		Group Separator.
CTRL ^	RS		Cursor HOME; always to page 1 if AUTO PAGE is set.
CTRL -	US		New Line.

Table 3-4. Special Control Operations (cont'd)

CONTROL		PAR. REF.	OPERATION
7. Data Editing Control:		3.10.8	
KEYS	OPERATION		DESCRIPTION
ESC */:	CLR ALL NULL		Clear all data on page to nulls.
ESC ;/+	CLR FG SP		Same as SHIFT/CLEAR keys.
ESC ,	CLR PROT SP		Clear all data to protected spaces.
ESC E	LINE INSERT		Same as LINE INSERT key.
ESC J, K	PAGE CHANGE		Same as NEW PAGE key.
ESC Q	CHAR INSERT		Same as CHAR INSERT key.
ESC R	DEL LINE		Same as LINE DELETE key.
ESC T	ERASE LINE TO PERS		Same as LINE ERASE key.
ESC W	DEL CHAR		Same as CHAR DELETE key.
ESC Y	ERASE FG TO PERS		Same as PAGE ERASE key.
ESC q	SET INS MODE		Set insert mode.
ESC r	CLR INS MODE		Clear insert mode.
ESC y	ERASE PG TO NULL		Delete all data on page to NULLS, beginning at the cursor.
8. Data Transmission Control:		3.10.9	
KEYS	OPERATION		DESCRIPTION
ESC 4	SEND LINE FG		Same as SEND LINE key.
ESC 5	SEND PAGE FG		Same as SEND PAGE key.

Table 3-4. Special Control Operations (cont'd)

CONTROL		PAR. REF.	OPERATION
8. Data Transmission Control (cont'd):		3.10.9	
KEYS	OPERATION		DESCRIPTION
ESC 6	SEND LINE ALL		Same as SHIFT/SEND LINE keys.
ESC 7	SEND PAGE ALL		Sends all data on page with protected data bracked by "ESC)" and "ESC(".
ESC B	SET BLOCK		Set Block Mode.
ESC C	SET CONV		Start Conversation Mode operation.
ESC DH	H DUPL		Set dynamic half duplex mode.
ESC DF	F DUPL		Set dynamic full duplex mode.
ESC A	BUFF PRINTM		Set buffered Print Mode.
ESC S	SEND MSG		Send message.
ESC @	PRINT W/O PROT		Send unprotected data to printer and protected data as spaces.
ESC P	PRINT SCREEN		Same as PRINT key.
ESC L	PRINT UNFORM		Sends unformatted PRINT data.
CTRL t/T	PRINTER OFF		Turns off printer; terminates buffered Print Mode.

Table 3-4. Special Control Operations (cont'd)

CONTROL	PAR. REF.	OPERATION
8. Data Transmission Control (cont'd):	3.10.9	
KEYS OPERATION		DESCRIPTION
ESC /(*) READ PRC		Read cursor page, column, row (* = 0 or 1).
ESC ? READ RC		Read cursor column, row.
9. Video Attribute Control:	3.10.10	
KEYS USED		DESCRIPTION
ESC G 0		Reset to standard video.
ESC G 1		Designated areas are blanked.
ESC G 2		Designated areas blink.
ESC G 3		Designated areas are blanked.
ESC G 4		Designated areas reversed.
ESC G 5, 7		Designated areas reversed and blank.
ESC G 6		Designated areas reversed and blinking.

3.10.2 ESC Key Operations

The ESC key is another key that is always used in combination with one or more alphanumeric or special character keys to produce "escape sequence" operations. Figure 3-4 shows the various escape sequences available in the ADM-31 and the ASCII characters which are required to initiate the sequence. Escape sequences are typically initiated by the computer. When initiated from the keyboard the escape character and the desired ASCII character are transmitted to the computer. In Program Mode the escape sequence characters are also displayed on the CRT screen. Two additional keyboard initiated sequences are available:

- Press CTRL [, followed by the ASCII character appropriate to the escape sequence desired. Refer to paragraph 3.10.1 for details of CTRL key operations.

- Press SHIFT/FUNCTION, followed by the ASCII character appropriate to the escape sequence desired. Refer to paragraph 3.10.3 for details of FUNCTION key operations.

3.10.3 FUNCTION Key Operations

The FUNCTION key is also always used in combination with one or more alphanumeric or special character keys to produce ASCII codes or functions from the keyboard. These codes are typically initiated from the computer and are primarily for the convenience of the programmer. By pressing and holding or not pressing the SHIFT key prior to pressing the FUNCTION key, two entirely different functions can be produced.

The unshifted FUNCTION operation is initiated from the keyboard by pressing FUNCTION, followed by the ASCII character desired. The code produced for transmission consists of: SOH/ASCII character/CR. Ideally, the ASCII character is one which is not committed for any specific purpose until assigned by the programmer; however, any ASCII character shown in the standard graphic character set, Figure 3-5, may be used.

NOTE

The CR code here specified as the end of block character of the FUNCTION key sequence may be modified by a personality change sequence as described in paragraph 3.10.4.

	ESCAPE SEQUENCE					
HEX	2	3	4	5	6	7
0		0	@ PRINT w/o PROT	P PRINT PAGE	`	p
1	!	1	A BUFF PRNTM*	Q INSERT CHAR	a	q SET INS MODE
2	" KBD ENA	2	B SET BLOCK	R DELETE LINE	b	r CLEAR INS MODE
3	# KBD DISA	3	C SET CONV	S SEND MSG	c	s
4	$	4 SEND FG PAGE	D SET DUPLH or F	T ERASE LINE PERS*	d	t
5	%	5 SEND FG LINE	E IN-SERT LINE	U SET PGM MODE	e	u CLEAR PGM MODE
6	& SET PROTM	6 SEND ALL LINE	F	V	f	v SET AUTO PG
7	' CLEAR PROTM	7 SEND ALL PAGE	G ATTRIB CONTROL*	W DELETE CHAR	g	w CLEAR AUTO PG
8	(CLEAR WPROT	8	H	X CLEAR PGM MODE	h	x
9	) SET WPROT	9	I BACK TAB	Y ERASE PAGE FG	i TAB (SKIP)	y ERS PG TO NULL
A	* CLEAR ALL NULL	: CLEAR ALL NULL	J PAGE BACK	Z	j	z
B	+ CLR FG SP/PERS	; CLR FG SP/PERS	K PAGE FWD	[	k	{
C	, CLR TO PROT SP	<	L UNFORM PRNT	\	l	|
D	- LOAD PRC*	= LOAD CURSOR*	M	]	m	}
E	. CHANGE PERS*	>	N	^	n	~
F	/ READ PRC*	? READ CURSOR*	O	-	o DPLY PERS*	DEL

*Multiple Characters Required

Figure 3-4. ADM-31 Escape Sequence Characters, With HEX Coding

		FUNCTION			GRAPHIC CHARACTER SET					
HEX			0	1	2	3	4	5	6	7
	BITS 4321	BITS 765	000	001	010	011	100	101	110	111
0	0000		NUL	DLE		0	@	P	`	p
1	0001		SOH	DC1	!	1	A	Q	a	q
2	0010		STX	DC2	"	2	B	R	b	r
3	0011		ETX	DC3	#	3	C	S	c	s
4	0100		EOT	DC4	$	4	D	T	d	t
5	0101		ENQ	NAK	%	5	E	U	e	u
6	0110		ACK	SYN	&	6	F	V	f	v
7	0111		BEEP	ETB	'	7	G	W	g	w
8	1000		BS (←)	CAN	(	8	H	X	h	x
9	1001		(SKIP) HT	EM	)	9	I	Y	i	y
A	1010		LF (↓)	SUB	*	:	J	Z	j	z
B	1011		VT (↑)	ESC	+	;	K	[	k	{
C	1100		FF (→)	FS	,	<	L	\	l	¦
D	1101		CR	GS	-	=	M	]	m	}
E	1110		SO	(HOME) RS	.	>	N	^	n	~
F	1111		SI	(NEW LINE)US	/	?	O	_	o	DEL

Figure 3-5. ADM-31 Standard Graphic Character Set, With Hex Coding

The SHIFT/FUNCTION operation is an alternate method of selecting an escape sequence which affects activities at the terminal only. The operation is initiated at the keyboard by pressing SHIFT (hold), then FUNCTION, followed by the alphanumeric or special character key associated with the desired escape sequence. The operation will be executed at the terminal, but no escape characters will be transmitted. Refer to the chart in Figure 3-4 for the ADM-31 escape sequences which are available.

3.10.4 Personality Control Operations

The personality attributes which were assigned (or unspecified) to the ADM-31 terminal at the time of purchase can be temporarily modified at any time by the operator from either the keyboard or the host computer. The temporary or "dynamic" modification, which is terminated when power is removed from the terminal, is provided to allow the operator to alter certain character codes which may (for example) cause computer program interrupts if used as established. A personality change can be effected from the keyboard by entering ESC. followed by the ASCII code to be changed, then a HEX character code which identifies the new dynamic character. The HEX character code is a hexadecimal expression which identifies the character in the ADM-31 standard graphic set (Figure 3-5). The keyboard operations which effect the dynamic personality change are not written on the CRT screen or transmitted to the host computer; only the new dynamic character when called for by the operation.

The personality attributes applicable to the terminal may be displayed by executing an "ESC o0" sequence. The terminal will clear screen to nulls, then display three rows of personality characters, 16 ASCII HEX bytes to a row. The information contained in each row is as follows:

- The first row displays all the personality defaults installed in the terminal. This row is non variable.
- The second row displays all the personality defaults which may be dynamically changed.
- The third row displays the personality defaults currently active in the terminal.

The personality defaults subject to dynamic change are as follows:

<u>Escape Lead-In and Transmit Characters</u>

The escape sequence "ESC 0 (HEX character)" adds a new escape lead-in character to the standard escape character. (The

standard escape character. (The standard character is a bona fide computer character and cannot be changed.) Thus, the terminal will execute an escape sequence in response to the new character, as well as to the standard ESC character. During transmission, the new character will be transmitted in place of the standard character whenever ESC is called for.

NOTE

The dynamic personality change associated with the escape lead-in character is different from the other dynamic personality changes, in that the standard lead-in character cannot be changed, only added to. In all other dynamic personality changes, the standard character is temporarily replaced by the new character.

End Block Characters

"ESC.1 (HEX Code)" changes the standard End Block character to the selected (HEX Code) character. A second End Block character may be added using an "ESC 2 (HEX Code)" character. The second End Block character may be a new line or line feed character if desired. Both End Block characters would be imbedded in the text whenever the first End Block character was called for.

New Line Characters

"ESC.3 (HEX Code)" changes the standard New Line character and "ESC.4 (HEX Code)" adds a second New Line character, in the same manner as for End Block characters, above.

Other Personality Characters

- "ESC.5 (HEX Code)" establishes a new character for the standard Field Separator character.
- "ESC.6 (HEX Code)" establishes a new character for the standard FUNCTION lead-in character.
- "ESC.7 (HEX Code)" establishes a character which would be written on the screen when a parity error is sensed (not provided on standard ADM-31). The parity error character should be one the customer does not normally use.
- "ESC.8 (HEX Code)" establishes a new character for the character previously assigned to a Clear Screen command (usually a space code). The new character may be NULL, period, underline, etc.

- "ESC.9" is reserved.

- "ESC.A (HEX CODE)" establishes an RTS OFF delay time which is compatible with the baud rate at which the terminal is operating (in Block Mode only). The standard ADM-31 default RTS OFF delay time is 80 milliseconds, for operation at 110 baud. The following table expresses the recommended RTS OFF delay times in milliseconds for various baud rates, and the (HEX Code) required to obtain the delays (terminal must be in Block Mode).

RECOMMENDED RTS OFF DELAY TIMES					
RTS DELAY (MILLISECONDS)	BAUD RATE	HEX CODE	RTS DELAY (MILLISECONDS)	BAUD RATE	HEX CODE
172	50	AC	5	1800	05
115	75	73	5	2000	05
* 80	110	50	4	2400	04
64	135.5	40	4	3600	04
58	150	3A	3	4800	03
29	300	1D	3	7200	03
15	600	0F	3	9600	03
8	1200	08			

*Standard default setting

3.10.5 Terminal Control Operations

The ADM-31 keyboard can be disabled locally or disabled by a remote computer using the ASCII code associated with the following keystrokes:

ESC # Disables all keyboard operations.

ESC " Enables keyboard and restores keyboard control.

Disabling the keyboard (ESC #) protects the keyboard against inadvertent operation. Keyboard operation can be restored manually by pressing RESET momentarily. All data will be cleared from memory upon RESET.

3.10.6 Cursor Control Operations

Control of the cursor can be initiated at the keyboard using a CTRL or ESC key sequence. The ESC sequence consists of pressing the ESC key followed by one or more alpha or special character keys. The CTRL operation consists of pressing an alpha character

key while holding the CTRL key. When initiated, the operation causes the cursor to respond in the same manner as with the labeled operational control keys discussed in paragraph 3.3. (Also, the control code is transmitted during Conversation Mode transmission.) The coding is equivalent to that which the computer transmits to the terminal to control the cursor. Refer to Table 3-4 for the list of cursor control codes and to Figure 3-3 and 3-4 for the ASCII and HEX codings.

The cursor may be commanded to an absolute CRT screen position which can be defined in terms of its vertical (Y) and horizontal (X) coordinates. In the ADM-31, these coordinates are expressed by two ASCII (HEX) characters in conjunction with an escape sequence, with the vertical (Y) coordinate expressed first. Similarly, the absolute screen position of the cursor maybe read by means of another escape sequence. When initiated, the sequence causes the appropriate cursor operation to be executed; the control code is transmitted in Conversation Mode.

Figure 3-6 shows the absolute X or Y position (1-80 horizontal; 1-24 vertical) and the ASCII (HEX) code assigned to each position. The following escape sequences are used to execute absolute cursor positon operations:

- "ESC = (HEX) (HEX)" commands the cursor to the desired row (Y) and column (X) position on the current page.
- "ESC -[0 (HEX 30) or 1 (HEX 31)] (HEX) (HEX)" commands the cursor to the desired row (YX) and column (X) position on page 1 or page 2.
- "ESC ?" reads the cursor row (Y) and column (X) position on the current page.
- "ESC / [0 (HEX 30) or 1 (HEX 31)]" reads the cursor row (Y) as column (X) position on page 1 or page 2.

3.10.7 Format Control Operations

The operator can exercise control of the text format on the CRT screen from either the keyboard or the computer. At the keyboard, the operator uses the ESC or CTRL key in combination with alphanumeric or special character keys to establish the selected control sequences. These sequences are listed in Table 3-4 and the appropriate ASCII and hex codings are shown in Figure 3-3 and 3-4. Using the ESC key executes the selected operation, and causes the escape character and the ASCII character to be transmitted in Conversation Mode.

X or Y	ASCII CODE	HEX CODE	X or Y	ASCII CODE	HEX CODE	X or Y	ASCII CODE	HEX CODE
1	SPACE	20	28	;	3B	55	V	56
2	!	21	29	<	3C	56	W	57
3	"	22	30	=	3D	57	X	58
4	#	23	31	>	3E	58	Y	59
5	$	24	32	?	3F	59	Z	5A
6	%	25	33	@	40	60	[	5B
7	&	26	34	A	41	61	\	5C
8	'	27	35	B	42	62	]	5D
9	(	28	36	C	43	63	^	5E
10	)	29	37	D	44	64	_	5F
11	*	2A	38	E	45	65	`	60
12	+	2B	39	F	46	66	a	61
13	,	2C	40	G	47	67	b	62
14	-	2D	41	H	48	68	c	63
15	.	2E	42	I	49	69	d	64
16	/	2F	43	J	4A	70	e	65
17	0	30	44	K	4B	71	f	66
18	1	31	45	L	4C	72	g	67
19	2	32	46	M	4D	73	h	68
20	3	33	47	N	4E	74	i	69
21	4	34	48	O	4F	75	j	6A
22	5	35	49	P	50	76	k	6B
23	6	36	50	Q	51	77	l	6C
24	7	37	51	R	52	78	m	6D
25	8	38	52	S	53	79	n	6E
26	9	39	53	T	54	80	o	6F
27	:	3A	54	U	55			

Figure 3-6. Chart of Absolute Cursor Positioning Codes

3.10.8 Data Editing Control Operations

Data editing using escape sequences accomplishes essentially the same operations as those initiated by means of labeled special editing keys, as described in paragraph 3.4. Table 3-4 lists the previously described operations, as well as several which are available only via escape sequences. The escape-sequence operations take precedence over standard and dynamic personality attributes, unless otherwise specified. CLEAR and ERASE commands, apply only to the page currently being displayed, if AUTO PAGE is not set. The following escape sequences match the indicated special key operations:

- ESC E matches LINE INSERT.
- ESC J or ESC K matches NEW PAGE.
- ESC Q matches CHAR INSERT.
- ESC R matches LINE DELETE.
- ESC T matches LINE ERASE.
- ESC W matches CHAR DELETE.
- ESC ; or ESC + matches SHIFT/CLEAR. If AUTO PAGE is set, both pages are cleared.

The following data editing operations can be executed only via escape sequences:

- ESC * or ESC : commands CLEAR ALL TO NULL. All displayed data, protected and unprotected, is cleared and replaced with nulls. If AUTO PAGE is set, both pages are cleared.
- ESC, commands CLEAR ALL TO PROTECTED SPACES. Screen is cleared and replaced with protected spaces. If Protect Mode is now set, the last space on the screen is unprotected.
- ESC q sets INSERT MODE; ESC r clears INSERT MODE. Applies only to the line containing the cursor.
- ESC y commands ERASE PAGE TO NULL. All data on page following the cursor, protected and unprotected, is cleared and replaced with nulls.

3.10.9 Data Transmission Control Operations

Data transmission using escape sequences is associated most directly with Block Mode transmission, and accomplish essentially the same operations as those described in paragraphs 3.5 through 3.7.8. Table 3-4 lists all the data transmission operations available, some of which can be executed only via an escape sequence. The following escape sequences match the indicated special key operations:

- ESC 4 matches SEND LINE (unshifted).
- ESC 5 matches SEND PAGE (unshifted).
- ESC 6 matches SHIFT/SEND LINE.
- ESC 7 sends all data (up to cursor position) on page, with protected data bracketed by "ESC)" and "ESC (".
- ESC P matches PRINT, except that CR is sent upon completion of PRINT message.
- ESC L sends unformatted PRINT data; CR is sent upon completion of PRINT message.

The following data transmission operations can be executed only via escape sequences:

- ESC B sets Block Mode and ESC C sets Conversation Mode.
- ESC DH sets Conversation Mode Half Duplex and ESC DF sets Conversation Mode Full Duplex operation.
- ESC / (0 or 1) causes the YX coordinates of the cursor position on page 1 or page 2 to be read out to the computer.
- ESC ? causes the YX coordinates of the cursor position on the displayed page to be read out to the computer.
- ESC A (*) controls the Buffered Print Mode which uses the memory of the page not being displayed as a buffer. The command resets AUTO PAGE mode. To enter Buffered Print Mode, an ASCII 1 or 2 must be entered in place of (*); to turn printer off and return to normal mode, and ESC A0 or CTRL t/T (DC 4) must be entered.

Note

CR is sent to the host upon completion of PRINT message any time the operation is controlled by the host.

ESC A 1 causes data to be written into the printer buffer (page 2) and from page 2 to the printer at printer speed. Data will be lost if the buffer overflows. Meanwhile, data can be entered from the keyboard on page 1 (displayed on screen) while printing continues from page 2. CTRL t/T (DC 4) places page 2 on the screen and puts page 1 in background. This data is not lost; however, printing will stop when buffer is empty. Page 1 data may be recalled via NEW PAGE. ESC A 0 resets Buffered Print Mode.

ESC A 2 causes data to be displayed on the screen (page 1) while being written into the buffer (page 2) and then sent to the printer at print speed. If the buffer overflows data will be lost. ESC A 0 or CTRL t/T (DC 4) resets Buffered Print Mode.

- ESC S causes an FS character to be written at the cursor location. The cursor is then returned to the last previous FS or (unprotected) HOME. Transmission begins with the next character following HOME or the beginning of the next line following the first FS. Transmission stops at the last FS and the End Block character(s) is (are) written. The cursor moves to a new line. If AUTO PAGE is set, and transmission started on page 2, part or all of both pages could be transmitted. The final FS character is also transmitted.

- ESC @ causes all unprotected data on a page to be sent to the printer, with protected data sent as spaces. Trailing spaces or nulls are not transmitted, and attribute control codes are transmitted as spaces.

3.10.10 Video Attribute Control

The visual (video) attributes of the ADM-31 are generally established by the equipment design and the installation settings of SW 6 and SW 7 of Switch Bank 4 (see Figure 1-5). Setting SW 6 ON will cause NULLS on the CRT screen to appear as spaces. Setting SW 6 to OFF causes NULLS to appear as NULLS. Similarly SW 7 OFF causes the cursor to blink; SW 7 ON causes the cursor to not blink. Once selected, these attributes, along with others which cannot be selected at installation, establish the standard characteristics of the video presentation, unless temporarily modified by other terminal operations.

Certain video attributes can be temporarily (dynamically) modified using keyboard-initiated or computer-initiated escape sequences. The selected modification will be only to the end of the line containing the changed attribute. If power is turned off, the video attributes revert to their standard configuaration. Dynamically establishing or changing these attributes is accomplished by keying (or commanding from the computer) "ESC G", followed by a numeral (or equivalent ASCII code) 0 through 7. The attribute change is executed and the escape sequence is written for transmission to the computer. The following video attributes can be established or altered by the indicated escape sequences:

- ESC G 0 — Reset to standard video. Used in conjunction with other video escape sequences to establish the limits of the video filed being changed.
- ESC G 1,3 — Designated areas are blanked from the display. ESC G 1(3) starts field; ESC G 0 terminates field.
- ESC G 2 — Designated areas blink in the display. ESC G 2 starts field; ESC G 0 terminates field.
- ESC G 4 — Designated areas are reversed. ESC G 4 starts field; ESC G 0 terminates field.
- ESC G 5,7 — Designated areas are reversed and blank. ESC G 5(7) starts field; ESC G 0 terminates field.
- ESC G 6 — Designated areas on reversed and blinking. ESC G 6 starts field; ESC G 0 terminates field.

ESC 09 — Print OUT Firm ware Vers.

ESC * — Fills Screen w/ Nulls

ESC + — Clears Screen

ESC SHIFT 6 (Protect Mode)

ESC SHIFT 7 (Clears Protect Mode)

ESC J — Page Foward

ESC K — Page backward

Null & Blank Characters Are SW Selectable

Printer

ESC A 1 Data Can be Sent To The ADM31's Printer. Note The ADM31 will NOT Display Data

CTrL T To Abort mode (DC4)

SECTION 4

THEORY OF OPERATION

4.1 GENERAL DESCRIPTION

This section contains theory of operation information for ADM-31 Data Display Terminal.

4.2 FUNCTIONAL DESCRIPTION

The ADM-31 is a video display terminal designed to communicate with a remote computer. The terminal allows the user to do limited text processing at the display area.

The ADM-31 is a self-contained unit enclosed in a 13-inch by 20-inch (34-cm by 71-cm) casing. Included in the terminal casing is the keyboard logic, Microprocessing Unit (MPU), ROM, RAM, Video Monitor, and Switching Power Supply.

Functionally, the ADM-31 is divided into six sections, plus the Monitor and Switching Power Supply. Theory of operation for the Monitor is contained in Appendix C; for the Switching Power Supply in Appendix D.

- CPU - containing the system clock, M6800 MPU, system timing control logic, address buffers, and address decoders.
- External Interface - containing interface logic for an external port, printer port, modem port, current loop port, and polling port.
- Keyboard - containing keyboard matrix, keyboard interface adaptor, and keyboard timing logic.
- Video Display - containing CRT control and character generation logic.
- Memory - containing 8K of system ROM and 1K of SRAM.
- Configuration Switches - containing various switches to control system configuration.

4.3 THEORY OF OPERATION

4.3.1 Introduction

This section provides a functional description of the ADM-31 circuitry. The logical functions are first described at the system level, then individual circuit descriptions using detailed block diagrams are presented.

4.3.2 System Functional Description

The ADM-31 functional block diagram is shown in figure 4-1.

Data to be displayed on the CRT is either entered from the keyboard or sent to the terminal from a remote computer.

If data is entered from the keyboard, it is placed on the Data Bus and sent to the CPU section. From the CPU section, the data is sent to the Video section where it is written into the Video Refresh Data RAM.

The CPU section, executing a program stored in the Memory section, causes the contents of the Video Refresh Data RAM to be periodically displayed on the screen.

Data sent to the ADM-31 from a remote computer is routed from the External Interface section to the CPU section. The data is displayed on the CRT in the same manner as if it were entered from the keyboard.

The ADM-31 transmits data by retrieving the data from the Video Refresh Data RAM and routing it to the CPU section over the Data Bus. From the CPU section, the data is again placed on the Data Bus and sent to the External Interface Section where it is output from one of the interface ports.

<u>CPU Section</u>

The CPU section contains the M6800 MPU and associated address logic, as well as the system timing control and two-phase clock. The CPU section performs all the addressing and logic functions of the ADM-31. The CPU section also contains circuitry for address decoding and CPU address buffering.

<u>External Interface Section</u>

The External Interface section contains the circuitry to interface the ADM-31 with RS-232-C point-to-point signals, 20mA current loop signals, and modem logic. Optional logic

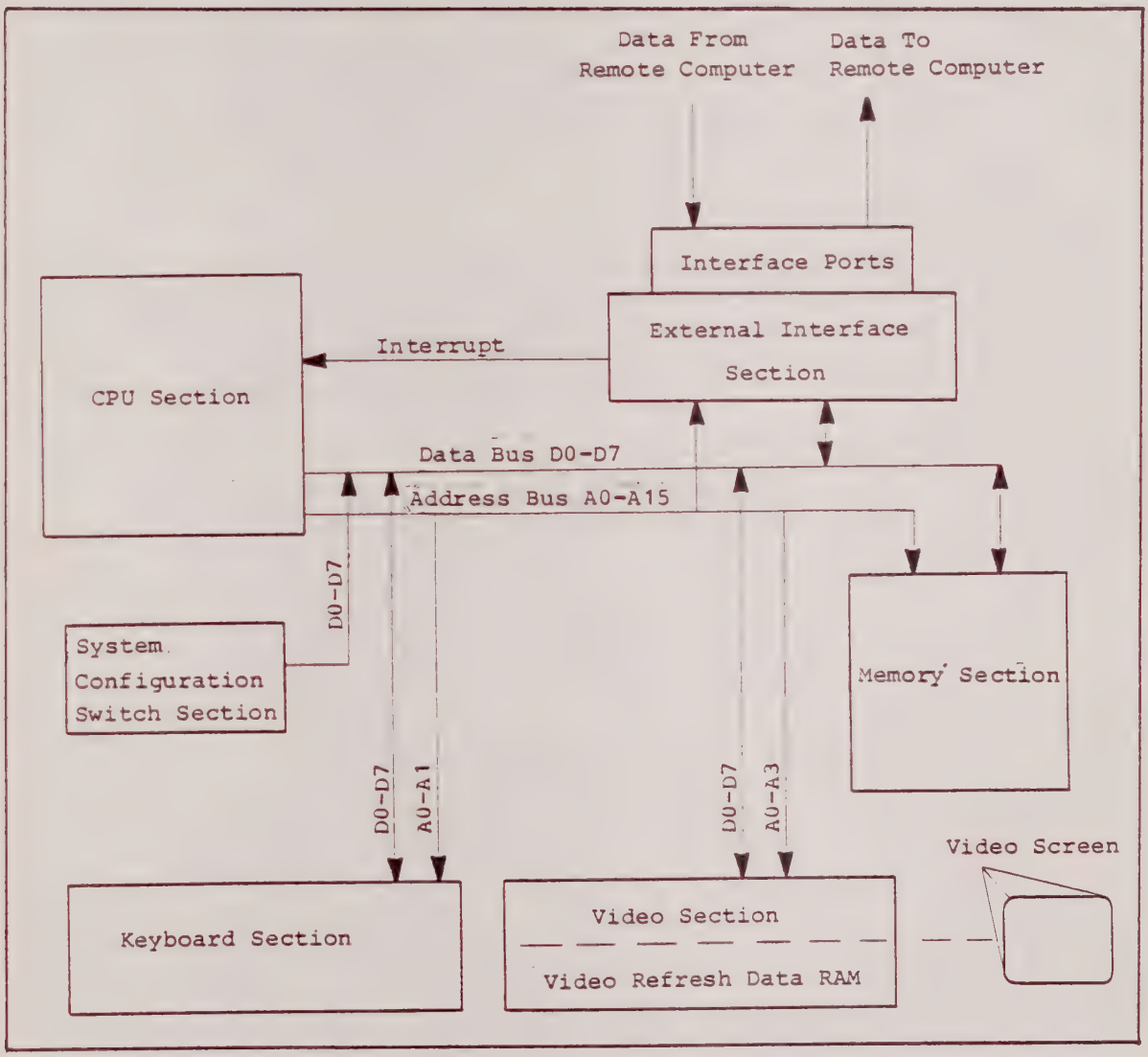

Figure 4-1. ADM-31 Functional Block Diagram

for an RS232 Serial Printer Port (allowing various printers to be used with the ADM-31) and for a daisychained devices interface is also included. The External Interface section also contains the Baud Rate Clock and Baud Rate switches to permit the ADM-31 to receive or transmit data at selected baud rates from 75 to 9600 baud.

Video Section

The Video section contains the display logic needed to drive the Cathode Ray Tube. This block also contains 4K of data RAM and the character generation circuits, as well as the Video Logic and 12-inch monitor.

System Memory Section

The Memory section of a standard ADM-31 contains 4K of Read Only Memory (ROM) and 1K of Random Access Memory (RAM). The 4K of ROM contains programs which allow the ADM-31 to perform its various functions. The 1K of RAM is used as system scratch pad memory and as a receive and transmit buffer.

System Configuration Switch Section

The System Configuration Switch section contains four switch banks which are used to encode various attributes and characteristics of the ADM-31 terminal.

These characteristics include: mode of data transmission and reception, polling address (if the polling option is installed) parity, word structure determination, refresh rate, and cursor/display attributes.

4.4 CPU SECTION DETAILED BLOCK DESCRIPTION

A block diagram of the CPU section is shown in figure 4-2.

4.4.1 CPU Section Overview

The CPU section contains logic to produce the timing signals and control all data operations in the ADM-31.

Timing signals for the ADM-31 are produced by the System Timing Control and the Two-Phase (2Ø) Clock. These signals are used to control the M6800 and other data transfer operations in the ADM-31.

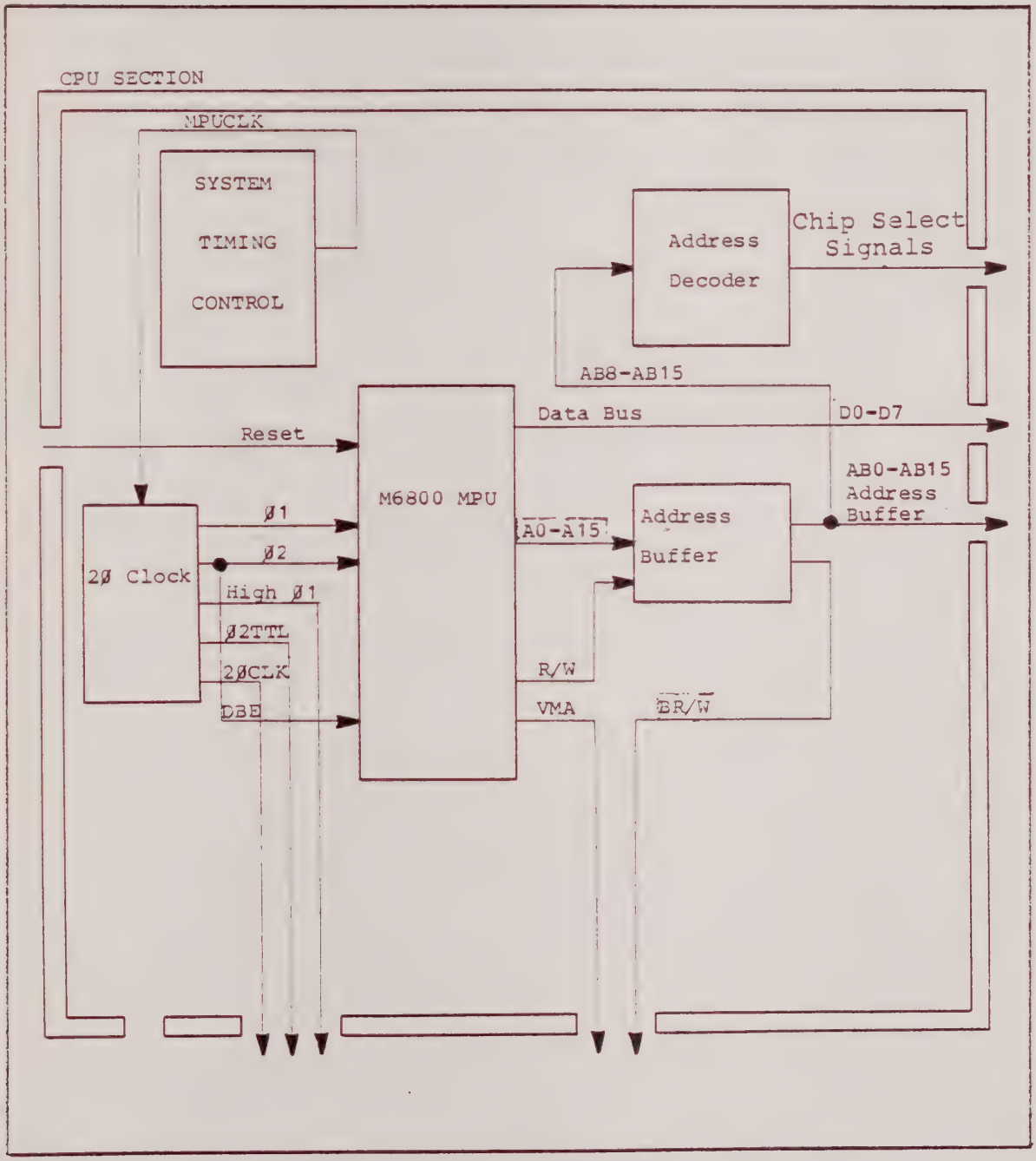

Figure 4-2. CPU Section Block Diagram

The MPU receives instructions on the Data Bus and performs data manipulation operations whose results are output on A0 through A15 and D0 through D7.

A0 through A15 are routed to the Address Buffer, placed on the Address Bus and sent to the Memory section, External Interface section, Video section, and Keyboard section.

A0 through A15 are also routed to the Address Decoder where they are used to produce chip select signals.

4.4.2 M6800 MPU 13C (Schematic P2)

The ADM-31 incorporates an M6800 CPU to control all addressing and data functions.

The M6800 microprocessor (figure 4-3) contains three 16-bit registers and two 8-bit accumulator registers used by the ADM-31.

The two 8-bit accumulators are used to hold results from operations performed by the ALU. The Program Counter is a 16-bit register which holds the program address. The 16-bit Index Register stores a 16-bit memory address used in the index mode of memory addressing. The Stack Pointer is a two-byte, sixteen-bit register that contains the next available location in the ADM-31 memory.

The sixteen address lines A0 through A15, output from the MPU, specify the address in memory where data on the data bus is to be read or written to.

The bidirectional data bus (D0 through D7) transfers data between the M6800 MPU and the rest of the system. All data transfers in the ADM-31 are routed through the MPU.

The MPU also contains a Condition Code Register which may be tested for conditional branches by the system program. The Condition Code Register indicates the results of an ALU operation with 7 condition bits: Negative (N), Zero (Z), Overflow (V), Carry from bit 7 (C), and Half carry from bit 3 (H). Bits 6 and 7 of the Condition Code Register are unused and are always one.

Five status signals are also used by the MPU.

The signal DATA BUS ENABLE (DBE) is tied to the Ø2 signal produced by the 2Ø Clock. When DBE is high, the MPU is able to transfer data to and from the data bus.

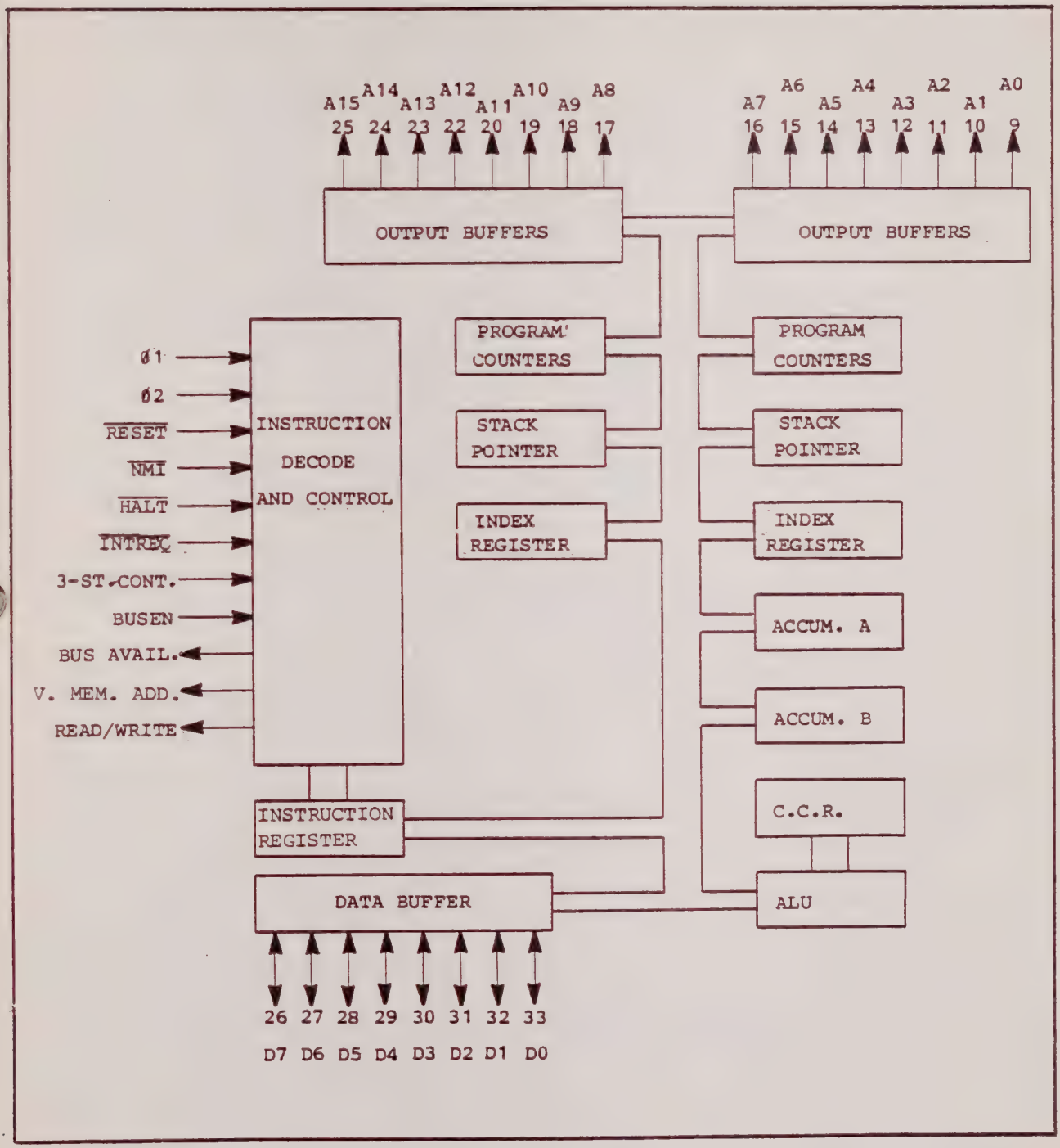

Figure 4-3. M6800 MPU Block Diagram

VALID MEMORY ADDRESS (VMA) is set high by the MPU when the address lines ABO through AB15 contain a valid memory address. When the timing signal Ø2TTL and VMA are high, VMAB and $\overline{VMAB}$ are produced.

VMAB is used as a chip enable signal for the MODEM/EXTENSION ports ACIA, AUXILIARY (Printer) port ACIA and the Keyboard PIA. $\overline{VMAB}$ is used to select the CRT Controller.

The signal READ/$\overline{WRITE}$ is high if a read operation is to be performed and low if a write operation is to be performed. R/$\overline{W}$ is routed from the MPU to the System Address Bus Buffers.

$\overline{INTERRUPT\ REQUEST}$ ($\overline{IRQ}$) is sent to the CPU from the Printer port ACIA or the MODEM/EXTENSION ports ACIA. When this signal is low, and an interrupt request has been generated by one of the peripheral ports, the MPU will service the device generating the interrrupt.

The $\overline{RESET}$ input to the M6800 MPU is used to reset and start the MPU after a power down or after the system RESET button is pushed.

When a low level is detected on the $\overline{RESET}$ line, the MPU starts execution of a routine to initialize the processor. All the high order address lines are set high and locations FFFE and FFFF are used to obtain the address where execution of the system reset program is to begin.

On reset, the MPU sets $\overline{IRQ}$ high. $\overline{IRQ}$ is then reset by the system reset program to allow serving of interrrupts from the system peripherals.

A flowchart depicting MPU generation is shown in figure 4-4.

4.4.3 Address Buffers 12E, 13E, 14E (Schematic P2)

The System Address Buffers consist of three chips which gate address lines A0 through A15 and the control signal R/$\overline{W}$ from the MPU, onto the Address Bus.

From the Address Bus, AB0 through AB15 are routed to the Address Decoders, External Interface section, Memory section, Video section, and Keyboard section.

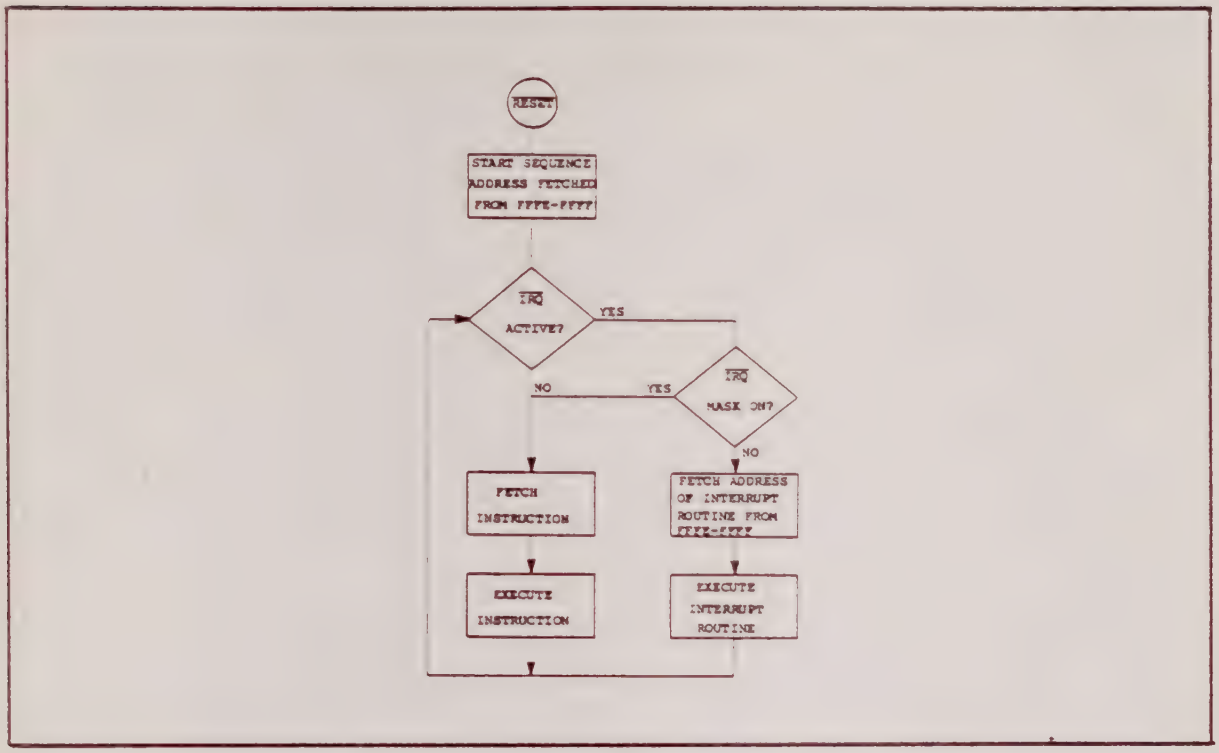

Figure 4-4. MPU Flowchart

BR/$\overline{W}$, produced from the MPU output signal R/$\overline{W}$, specifies a read operation to a selected device when high; write operations are specified when low.

This signal (BR/$\overline{W}$) is routed from the System Address Buffers to the $\overline{RAS}$-$\overline{CAS}$ logic, Refresh Memory Data Buffer and Latch, System RAM and ROM, MODEM Port ACIA, Keyboard PIA, Data Bus Buffer and Printer Port ACIA. BR/$\overline{W}$ ensures correct data transfer to or from the various parts of the system logic.

4.4.4 Address Decoders 13F, 14J (Schematic P2)

The Address Decoders utilize address lines AB8 through AB15. These lines are gated to the chips from the Address Bus and are used as chip select signals for the RAM, ROM, Video Refresh Data RAM, Personality ROM, Video Controller, Peripheral Interface Adapter, MODEM Port ACIA, Printer Port ACIA, and Switch Bank Buffers 1, 2, and 3.

The chip select signals are produced by the Address Decoders as shown in table 4-1.

Table 4-1. Chip Select Signals

SIGNAL	MEMORY ADDRESS	VMAB	LSB AB15	AB14	AB13	AB12	AB11	AB10	AB9	MSB AB8
$\overline{\text{RAM}}$	0000-03FF	1	0	0	0	0	x	x	x	x
$\overline{\text{ROM 1}}$	E000-EFFF	1	0	1	1	0	x	x	x	x
$\overline{\text{ROM 2}}$	F000-FFFF	1	1	1	1	1	x	x	x	x
$\overline{\text{PIA1}}$	7800	1	0	1	1	1	1	0	0	0
$\overline{\text{SW BNK2}}$	7900	1	0	1	1	1	1	0	0	1
$\overline{\text{ACIA1}}$	7A00	1	0	1	1	1	1	0	1	0
$\overline{\text{PERROM}}$ or $\overline{\text{ANSPER}}$	7B00	1	0	1	1	1	1	0	1	1
$\overline{\text{PRNTER}}$	7C00	1	0	1	1	1	1	1	0	0
$\overline{\text{SW BNK3}}$	7D00	1	0	1	1	1	1	1	0	1
$\overline{\text{SW BNK1}}$	7E00	1	0	1	1	1	1	1	1	0
VTAC	7F00	1	0	1	1	1	1	1	1	1
$\overline{\text{HALT}}$	7000	1	0	1	1	1	1	x	x	x
CRTRAM or $\overline{\text{CRTRAM}}$	8000-88FF	1	1	0	x	x	x	x	x	x

RAM (Stack)	0001-003F	(63 Bytes)
RAM (RCV Buf.)	0148-0400	(696 Bytes)
RAM (XMIT BUF.)	0140-0147	(8 Bytes)
ROM A	E000-E7FF	
ROM B	E800-EFFF	
ROM C*	E000-FTFF	
ROM D*	F800-FFFF	

1 = High
0 = Low
x = Don't Care

*Note: Standard PROMs

4.5.5 Two Phase (2Ø) Clock (Schematic P2 and P3)

The 2Ø Clock and associated logic consists of Master Oscillator 1B, Divide-by-Five Counter 1D, and Clock Generator 12C.

The Master Oscillator contains an oscillating quartz crystal which produces the signal CLOCK (CLK and $\overline{CLK}$). CLK and $\overline{CLK}$ oscillate at 19.584 MHz.

$\overline{CLK}$ is routed to the $\overline{RAS}$-$\overline{CAS}$ logic and the Video Logic. CLK is routed to the Refresh Memory Data Buffer and Latch and the Divide-by-Five Counter.

The Divide-by-Five Counter counts once for each low-to-high transition of CLK and produces COUNT A (CNTA), COUNT B (CNTB), and MPU CLOCK (MPUCLK). MPUCLK, routed to the Clock Generator, goes high at one fifth the rate of CLK (3.9168 MHz). The Divide-by-Five Counter is reset each time MPUCLK goes high.

The Clock Generator receives the signal MPUCLK as input. From this signal, Ø1 and Ø2 are produced and routed to the MPU. In addition to the Ø1 and Ø2 outputs, the Clock Generator produces 2 TIMES CLOCK (2xCLK) which oscillates at half the rate of MPUCLK. 2xCLK is used as a timing signal in the $\overline{RAS}$-$\overline{CAS}$ logic and the Video logic. 2xCLK oscillates at 1.9584 MHz.

The timing signal Ø2TTL is in phase with the Ø2 output of the Clock Generator and is used with the VMA output of the MPU to produce VMAB and $\overline{VMAB}$.

The other signals produced by the Clock Generator -- REFRESH GRANT (REFGNT), MEMORY CLOCK (MEMCLK) and DIRECT MEMORY ACCESS ($\overline{DMA}$) -- are routed to external text sockets.

The Clock Generator also produces the signal $\overline{RESET}$. This active low signal is used to reset the MPU (see M6800 CPU) and the Keyboard PIA.

$\overline{RESET}$ is pulled low when the ADM-31 is powered up or when the system reset button is pushed.

4.5 EXTERNAL INTERFACE SECTION DETAILED BLOCK DESCRIPTION

A block diagram of the External Interface section is shown in figure 4-5.

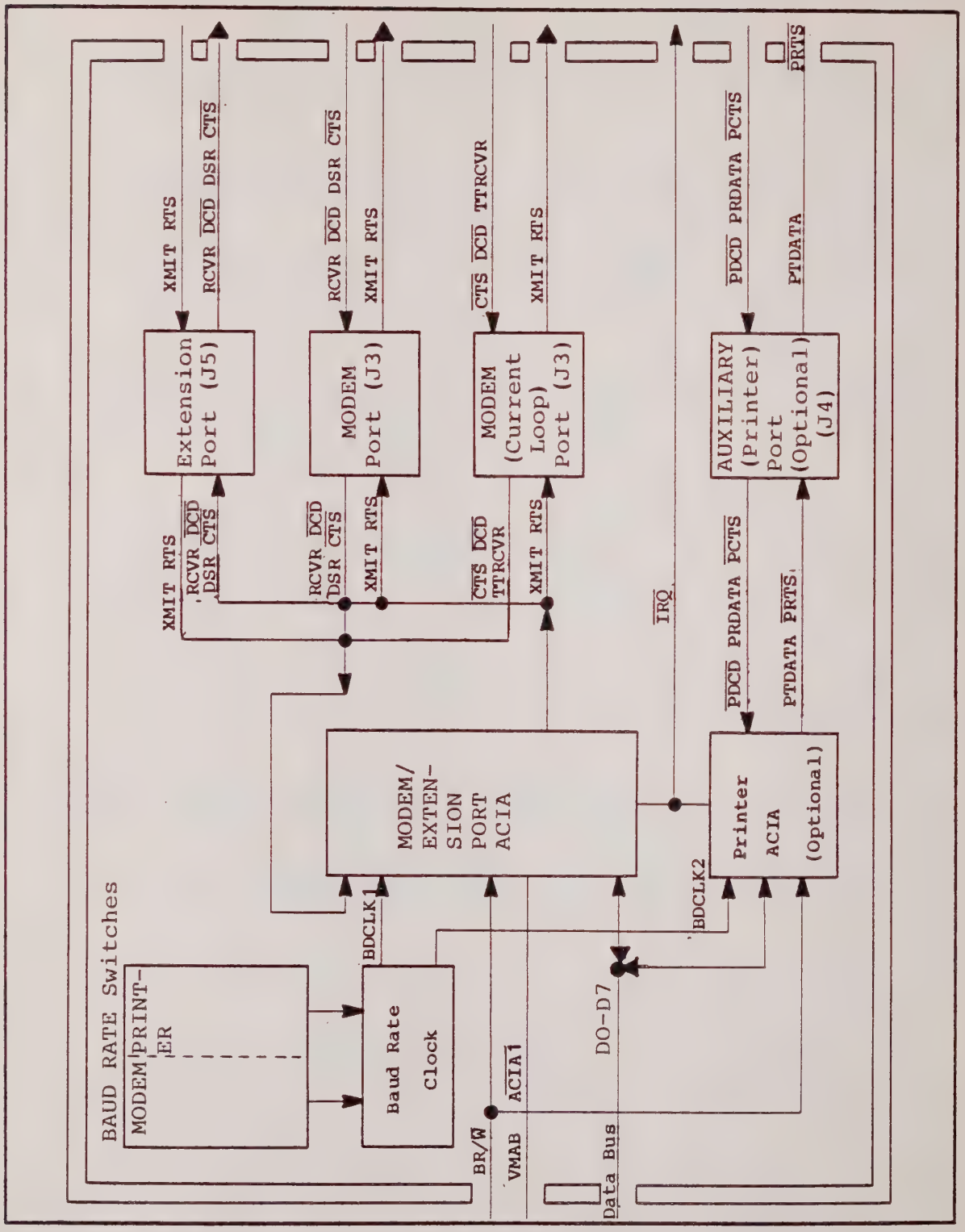

Figure 4-5. External Interface Section Block Diagram

4.5.1 External Interface Section Overview

The External Interface section controls the transfer of data between the ADM-31 and the remote computer or modem or other device.

The rate of data transfer is controlled by the BAUD RATE switches and Baud Rate Clock.

Data to be transferred from the ADM-31 through the three external interface ports is routed from the MPU to the Printer ACIA and MODEM/EXTENSION ports ACIA over the Data Bus. The Printer and MODEM/EXTENSION port ACIAs convert the data from parallel form to serial form then route the data to the external interface ports.

Data from a remote computer or modem is routed through the external interface ports and input to the Printer ACIA or MODEM/EXTENSION ports ACIA. The ACIAs perform parity and framing checks on the data, convert the data from serial to parallel form then place the data on the Data Bus to be routed to the CPU section.

4.5.2 Baud Rate Clock 2B and BAUD RATE Switches (Schematic P8)

The Baud Rate Clock and BAUD RATE switches are used to set the rate at which the ADM-31 receives data from and transmits data to the remote computer.

The ADM-31 contains two 16-position baud rate switches: the PRINTER BAUD RATE switch and the MODEM BAUD RATE switch. The PRINTER BAUD RATE switch is used to set the rate at which data will be transmitted to the printer from the ADM-31. Each setting of the PRINTER switch establishes a certain configuration of the TA through TD lines of the printer baud rate generator, which defines the baud rate.

The MODEM BAUD RATE switch is used to select the rate of data transmission and data reception through the MODEM/Current-Loop port. Each setting of the MODEM switch establishes a certain configuration of the RA through RD lines of the (console) baud rate generator, which defines the baud rate.

The baud rates selected for the various switch positions are as follows:

SWITCH POSITION	BAUD RATE	SWITCH POSITION	BAUD RATE
0	50	8	1800
1	75	9	2000
2	110	10	2400
3	134.5	11	3600
4	150	12	4800
5	300	13	7200
6	600	14	9600
7	1200	15	Not Used

The Baud Rate Clock receives as input RA through RD from the MODEM BAUD RATE switch, TA through TD from the PRINTER BAUD RATE switch, and a clock signal of 5.0688 MHz. Using these inputs, the Baud Rate clock outputs BAUD CLOCK 1 (BDCLK1) at the rate specified by RA through RD and BAUD CLOCK 2 (BDCLK2) at the rate specified by TA through TD.

BDCLK1 is routed to the MODEM/EXTENSION ports Asynchronous Communication Interface Adaptor (ACIA) where it is used to control the rate of data transmission and reception to and from the MODEM/Current Loop and EXTENSION ports.

BDCLK2 is routed to the Printer port ACIA where it is used to control the rate of data transmission from the ADM-31 to the printer.

4.5.3 MODEM/EXTENSION Ports ACIA (Schematic P8)

The MODEM/EXTENSION ports (Modem) ACIA provides the data formatting and control necessary to the M6800 MPU in the ADM-31 with serial asynchronous devices, such as a modem. Interfacing through the MODEM and EXTENSION external interface ports, the Modem ACIA receives data from the external device over the RCVR (RXDATA) line and transmits data to the device over the XMIT (TXDATA) line.

Serial data from the remote computer (Modem) is received by the ACIA over RCVR, reformatted into parallel data and placed on the D0 thru D7 Data Bus lines for use by the MPU. Data to be transmitted to the computer is placed by the MPU on D0 thru D7 in parallel, then reformatted into serial form and sent to the external device over XMIT.

The rate of reception/transmission by the ACIA is controlled by the signal BDCLK1, which is produced by the Baud Rate Clock.

Data reception and transmission is controlled by the remote computer using a group of control and status signals which pass between the computer and the Modem ACIA through the MODEM or EXTENSION port.

Data Transmission Signals

When the computer (Modem) is ready to receive data, the CLEAR TO SEND (CTS) line at the MODEM port goes high. CTS is inverted and used by the ACIA to enable data transmission. If daisychained devices are connected to the EXTENSION port, $\overline{CTS}$ low alerts the devices that the computer (Modem) is ready to receive data.

When the ADM-31 (or the devices connected to the EXTENSION port) is (are) ready, READY TO SEND (RTS) is raised to a high level to uinform the computer (Modem) that data is ready to be transmitted. The computer (Modem) then performs certain functions which ready it to receive data.

In addition to RTS, the DATA TERMINAL READY (DTR) line is raised to a high level to control the switching of the computer (Modem) to the data channel used by the ADM-31 (or the daisychained devices connected to the EXTENSION port). See figure 4-6 for a typical daisychain configuration.

Data is transmitted to the computer (Modem) over XMIT. As long as the computer (Modem) is receiving a clear and correct signal, DATA CARRIER DETECT (DCD) at the MODEM port is held high. DCD is inverted and used by the ACIA as an indication that the data carrier line is available. DCD is also routed to the devices connected to the EXTENSION port as an indication that the data carrier line is available.

DATA SET READY (DSR) may be used in place of $\overline{CTS}$ for any device connected to the EXTENSION port which requires a high level signal to indicate when the remote computer (Modem) is ready to receive data.

Data transmission for current loop devices is accomplished through the MODEM port over XMIT. The same group of control and status signals described above are passed between the computer and the MODEM ACIA. In addition, two secondary carrier signals are enabled by system configuration control switches in the ADM-31:

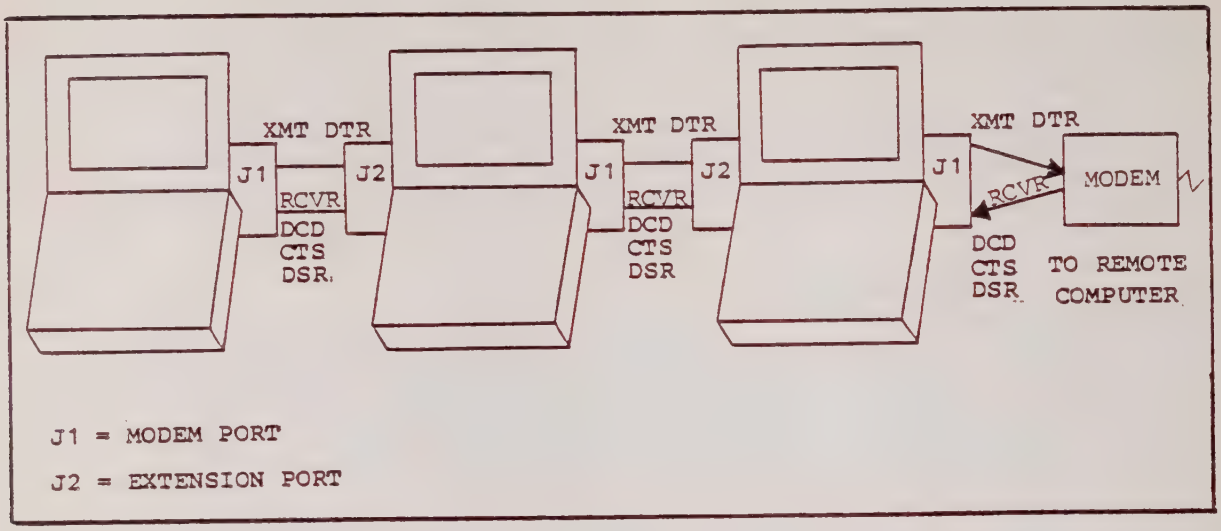

Figure 4-6. Typical Daisychain Configuration

- SW 4 of Switch Bank No. 4 is closed to enable the ADM-31 current loop transmitter. The SECONDARY CARRIER DETECT (SCF) line goes high to indicate the readiness of the secondary carrier to transmit; this state of readiness is communicated to the transmitter through the closed switch.

- SW 5 of Switch Bank No. 4 is closed to enable the ADM-31 secondary channel. When SCF goes high, the secondary carrier readiness is passed through SW 5, to enable the terminal's keyboard functions; SECONDARY READY TO SEND (SCA) goes high to inform the computer (Modem) that both the secondary device and the ADM-31 are ready to transmit.

Data Reception Signals

Data reception through the MODEM and EXTENSION ports using the Modem ACIA requires essentially the same control and status signals as for data transmission. The principal exception is that data originates at the computer or current loop device and is received at the MODEM port over RCVR. In addition to being used by the ADM-31 receiving circuits, the data may be sent to other devices connected to the EXTENSION port over RCVR. The ADM-31 current loop receiver need not be enabled by configuration control switches; the TTRCVR input from the current loop device is passed directly to the ADM-31 receiving circuits.

4.5.4 Modem ACIA Internal Registers

The Modem ACIA appears to the MPU as two addressable memory locations. The MPU addresses the ACIA by pulling $\overline{\text{ACIA1}}$ low (see table 4-1), then accessing one of the four ACIA internal registers with AB0 and R/$\overline{\text{W}}$. For the ACIA to perform data transfers between the MPU and External Interface Ports, VMAB must be high.

The ACIA contains four internal registers which are used for status, control, reception, and transmission of data.

Transmit Data Register

The Transmit Data Register, a write only register, is used to hold data before it is transmitted to the External Interface Ports. Data from this register is placed on XMIT when the MPU sets AB0 high to select the Transmit Data Register, and BR/$\overline{\text{W}}$ and $\overline{\text{ACIA1}}$ low to select the ACIA chip.

Receive Data Register

The Receive Data Register, a read only register, holds data received via RCVR before it is output on D0 through D7. Data in the Receive Data Register is placed on D0 through D7 when the MPU sets AB0 high to select the Receive Data Register, then selects the ACIA with $\overline{\text{ACIA1}}$ and sets BR/$\overline{\text{W}}$ high.

Control Register

The Control Register is an eight-bit write only register which is used by the MPU to control the receiver, transmitter, and REQUEST TO SEND (RTS) functions of the ACIA. The MPU controls the ACIA by setting AB0 and BR/$\overline{\text{W}}$ low and placing the data to be written into the Control Register on D0 thru D7.

The eight bits of the ACIA Control Register function as shown in table 4-2.

Table 4-2. ACIA Control Register Bit Functions

BDCLK1 divide ratio and master set	BIT 1	BIT 0	FUNCTION
	0	0	Divide BDCLK by 1 for transmission and reception rate
	0	1	Divide BDCLK by 16 for transmission and reception rate
	1	0	Divide BDCLK by 64 for transmission and reception rate
	1	1	Reset ACIA

Word length, parity and number of stop bits	BIT 4	BIT 3	BIT 2	FUNCTION
	0	0	0	7 bits, even parity, 2 stop bits
	0	0	1	7 bits, odd parity, 2 stop bits
	0	1	0	7 bits, even parity, 1 stop bit
	0	1	1	7 bits, odd parity, 1 stop bit
	1	0	0	8 bits, 2 stop bits
	1	0	1	8 bits, 1 stop bit
	1	1	0	8 bits, even parity, 1 stop bit
	1	1	1	8 bits, odd parity, 1 stop bit

Table 4-2. ACIA Control Register Bit Functions (cont'd)

	BIT 6	BIT 5	FUNCTION
Enable or disable interrupt when Transmit Register empty. Request to Send ($\overline{RTS}$) control and break character transmit.	0	0	Disable Transmit Register empty interrupt. $\overline{RTS}$ = low.
	0	1	Enable Transmit Register empty interrupt. $\overline{RTS}$ = low.
	1	0	Disable Transmit Register empty interrupt. $\overline{RTS}$ = high.
	1	1	Disable Transmit Register empty interrupt. Transmit Break (space) on Transmit Data Output. $\overline{RTS}$ = low.

	BIT 9	FUNCTION
Enable or disable interrupts	0	Disable interrupt on Receive Data Register empty condition, by a master reset, or low-to-high transition of $\overline{DCD}$, which indicates loss of data carrier lines.
	1	Enable interrupt on Receive Data Register full condition, overrun condition, or low-to-high transition of $\overline{DCD}$, which indicates loss of data carrier line.

Status Register

The read only Status Register contains information on the status of the ACIA. This information is read by the MPU when: $\overline{ABO}$ is low, selecting the Control Register or Status Register, R/$\overline{W}$ is high, selecting the read only Status Register; and the chip is enabled by setting $\overline{ACIA1}$ low. The information contained in this register is placed on D0 through D7 and routed to the MPU.

The functions of the eight bits of the Status Register are shown in table 4-3.

Table 4-3. ACIA Status Register

BIT	FUNCTION	DESCRIPTION
0	Receive Data Register full	This bit is set when data sent to the ACIA from the external interface port over RCVR has been placed in the Receive Data Register and is ready to be placed on D0 through D7 then routed to the MPU. Bit 0 is cleared by a master reset or DCD high, after the MPU reads the data in this register.
1	Transmit Data Register empty	Bit 1 is set when data sent from the MPU to the ACIA and placed in the Transmit Data Register, has been sent to the external interface port over XMIT. This bit is low when the data in the Transmit Data Register has not been sent to the external interface port.
2	DATA CARRIER DETECT status	This bit will be set if the Data Carrier Detect (DCD) input through the MODEM port goes high, indicating that the carrier line is no longer available. The bit is cleared after DCD returns to a low state, by a master reset, or by the MPU performing a read Status Register operation, followed by a read Receive Data Register operation.
3	CLEAR TO SEND status	This signal indicates the status of the CLEAR TO SEND (CTS) signal. When this bit is low, data may be transmitted from the ACIA through the MODEM port. When CTS is high, the Transmit Data Register Empty Bit (bit 7) is held low to prevent the ADM-31 from transmitting data through the MODEM port.

Table 4-3. ACIA Status Register (cont'd)

BIT	FUNCTION	DESCRIPTION
4	Framing Error	This bit is set when a framing error occurs. A framing error indicates that the character received from the external interface port over RCVR is improperly framed by a start and stop bit. Framing errors are usually caused by a synchronization error, faulty transmission or a break condition. The bit is set or reset for each character received.
5	Receiver Overrun	When this bit is set, one or more characters have been lost due to the contents of the Receive Data Register not being read before the next character in the data stream was placed in the Receive Data Register. This bit is reset by a master reset or when data is read from the Receive Data Register.
6	Parity Error	A parity error occurs when the number of high bits (1s) in a received character does not agree with the parity specified by Control Register bits 2 through 4. The parity error bit is set or reset for each character received over RCVR.
7	Interrupt Request	This bit indicates the Status of the ACIA $\overline{IRQ}$ output. When $\overline{IRQ}$ is low, indicating an active interrupt, bit 7 is set high. The MPU clears the Interrupt Request Bit by reading the Receiver Data Register or writing to the Transmit Data Register.

$\overline{\text{IRQ}}$ Functions

The $\overline{\text{IRQ}}$ output from the MODEM/EXTENSION ports ACIA is used to notify the MPU of an interrupt condition that requires service.

When the MPU detects that $\overline{\text{IRQ}}$ has gone low, it executes a routine which determines the cause of the interrupt by reading the ACIA Status Register. After the source of the interrupt is determined, it is serviced by the MPU. An interrupt may be caused by a condition in either the transmission or receiver sections of the ACIA.

The transmission section causes $\overline{\text{IRQ}}$ to go low when bit 5 of the Control Register is high, bit 6 is low (see table 4-2), and the Transmit Data Register empty bit (bit 1) of the Status Register goes high to indicate that the ACIA has transferred data and is ready to receive additional input from the MPU.

The MPU services this interrupt by executing a routine which writes data into the Transmit Data Register.

The receiver section causes $\overline{\text{IRQ}}$ to go low if bit 7 of the Control Register is set and the Receive Data Register Full bit (bit 0 of the Status Register) goes high to indicate that the ACIA has received a complete character from the External ports and is ready to transmit the character to the MPU.

The MPU clears this interrupt by reading data from the Receive Data Register.

The receiver also sets $\overline{\text{IRQ}}$ low, if an overrun error has occurred or $\overline{\text{DCD}}$ goes high (Control Register bit 7 is set).

4.5.5 Printer Port ACIA 13B (Schematic P11)

The Printer Port ACIA is an optional interface adapter which is installed only if the ADM-31 is used with a Lear Siegler Printer. The functions of the Printer Port ACIA are essentially the same as those of the Modem ACIA. The only differences are the signals used for controlling or expressing the status of data transmission and reception. The Printer Port ACIA is selected by the MPU when $\overline{\text{PRNTR}}$ goes low.

The signal PRINTER RECEIVE DATA (PRDATA) is used to transmit data from printer, through the Printer Port, to the ACIA. PRINTER TRANSMIT DATA (PTDATA) is used to transmit data from the ACIA to the printer, through the Printer port.

The control signals PRINTER REQUEST TO SEND (PRTS), PRINTER CLEAR TO SEND (PCTS), and PRINTER DATA CARRIER DETECT (PDCD) are used to control data transmission and reception between the ACIA and the printer. These signals have the same function as the corresponding Modem Port ACIA signals.

BDCLK2, produced by the Baud Rate Clock, determines the rate of data transmission and reception between the ADM-31 and the printer.

4.6 MEMORY SECTION DETAILED BLOCK DESCRIPTION

A block diagram of the Memory section is shown in figure 4-7.

4.6.1 Memory Section Overview

The Memory Section contains the system scratch pad memory, ADM-31 operating system, and system configuration information.

The MPU reads data from the Memory Section by selecting a memory chip with the chip select signals produced by the CPU Section, then placing the address of the memory location to be accessed on the Address Bus. The data from the memory is sent to the Data Buffers and placed on the Data Bus to be routed to the MPU.

The Data Buffers also gate data from the MPU to the system RAM. The MPU places data in the RAM by selecting the RAM chip, placing the address of the location where data is to be written on AB0 through AB9 and routing the data to be placed in the memory to the Data Buffers over D0 through D7.

4.6.2 2Kx8 ROMS 9F Thru 12F (Schematic P7)

The four 2Kx8 ROMs (two standard and two optional) contain the ADM-31 operating system and other related firmware.

Each ROM chip is enabled by ROMA, ROMB, ROMC, or ROMD which are produced by ROM1, ROM2, and AB11 as shown in table 4-4.

When the selected ROM chip is enabled, the data from the address specified by AB0 through AB4 is placed on SMOD0 through SMOD7 and routed to the Data Buffers.

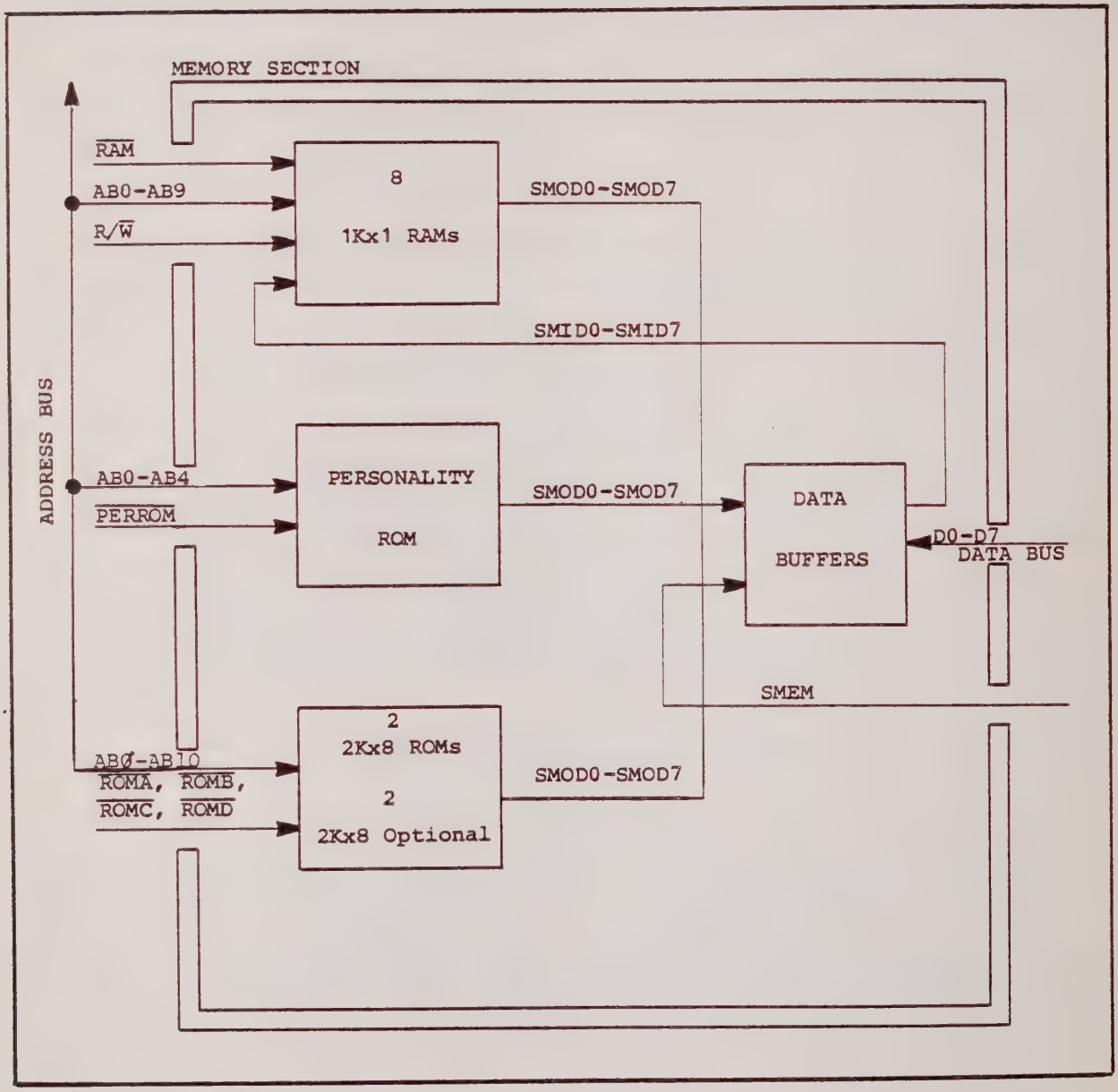

Figure 4-7. Memory Section Block Diagram

Table 4-4. ROM Select Signals

SIGNAL	ROM1*	ROM2*	AB11
$\overline{\text{ROMA}}$**	0	x	0
$\overline{\text{ROMB}}$**	0	x	1
$\overline{\text{ROMC}}$	x	0	0
$\overline{\text{ROMD}}$	x	0	1

0 = low
1 = high
x = don't care

*$\overline{\text{ROM1}}$ and $\overline{\text{ROM2}}$ are generated as shown in table 4-1.
**Optional, used if 8K ROM is installed.

4.6.3 Personality ROM 14H (Schematic P7)

The Personality ROM contains system configuration information used by the operating system. The Personality ROM is enabled by PERROM. Data from the Personality ROM is read from the address specified by AB0 through AB4 (7B00), output to SMOD0 through SMOD7, and routed to the Data Buffers.

4.6.4 1Kx1 RAMS 8H Thru 13H (Schematic P7)

The eight 1Kx1 RAMS are used for temporary data storage, scratch pad memory, input and output data buffers. Temporary data storage and scratch pad memory operations take place in address locations 0001 thru 003F, Input Data Buffer operations in locations 0148 thru 0400, and Output Data Buffer operations in locations 0140 thru 0147.

Each of the RAM chips is enabled by the signal RAM and has one line of SYSTEM MEMORY IN DATA 0 (SMID0) through SYSTEM MEMORY IN DATA 7 (SMID7) as input. Each RAM outputs data to one line of SYSTEM MEMORY OUT DATA 0 (SMOD0) through SYSTEM MEMORY OUT DATA 7 (SMOD7), which are routed to the Data Buffers.

A data read or data write operation is specified for each RAM by the signal BR/$\overline{\text{W}}$.

If BR/$\overline{W}$ is high indicating a read operation, data is read from the location specified by AB0 through AB9, placed on SMOD0 through SMOD7 and routed to the Data Buffers.

If BR/$\overline{W}$ is low, indicating a write operation, data from SMID0 through SMID7 is written to the RAM address specified by AB0 through AB9.

4.6.5 Data Buffers 9J, 9K, 14H, 16F (Schematic P7)

The Data Buffers are used to transfer data between the Data Bus and the system ROM, system RAM, and Personality ROM.

The direction of data flow through the Data Buffers is controlled by the signal SMEM. If one of the signals $\overline{PERROM}$, $\overline{RAM}$, $\overline{ROM1}$, or $\overline{ROM2}$ is low (indicating that the MPU has selected the Personality ROM, system RAM, or one of the ROMs) and the MPU sets BR/$\overline{W}$ high (indicating that data is to be read from the system memory) SMEM goes high and data on SMODO through SMOD7 is placed on the Data Bus.

If BR/$\overline{W}$ is low (indicating that data from the MPU is to be written into system memory) and one of the chip select signals, $\overline{PERROM}$, $\overline{RAM}$, $\overline{ROM1}$, or $\overline{ROM2}$ is low, SMEM goes low and the contents of the data bus are placed on SMID0 through SMID7 and routed to the system ROM or RAM.

4.7 KEYBOARD SECTION DETAILED BLOCK DESCRIPTION

The Keyboard Section contains the logic necessary to interface the keyboard with the ADM-31. A block diagram of the Keyboard Section is shown in figure 4-8.

4.7.1 Keyboard Section Overview

The Keyboard functions as follows: The MPU sends to the PIA data generated from a binary count cycle--the Keyboard "Scan". The PIA routes part of this data as KBD0 through KBD3 to the 4-to-16 decoder causing one line, DC0 through DC16 to be selected. The rest of the data from the PIA is routed to the 9-to-1 Mux causing one line of DM0 through DM8 to be selected.

If the key in the Keyboard Matrix at the intersection of the two lines is pressed, STROBE is pulsed, causing the scan to be stopped and DEBOUNCE TRIGGER (DEBTRG) to go high to indicate that a key has been pressed. DEBTRG triggers timer 4J causing DEBOUNCE DELAY (DEBDLY) to go high after 10 ms. If the key is still pressed when DEBDLY goes high, the address of the key is decoded by locating its corresponding character in the look-up table located in system memory. From the look-up table the

appropriate ASCII character code is found and routed to the Character Generator to be displayed. If the key is not pressed when DEBDLY goes high, the look-up is aborted and the scan is continued.

4.7.2 Peripheral Interface Adapter (PIA) 5J (Schematic P9)

The PIA provides the logic and control necessary to interface the keyboard with the ADM-31 MPU.

The MPU controls the configuration of the PIA, as well as the data transfer operations performed by the PIA through the control lines $\overline{PIA1}$, AB0, AB1, BR/$\overline{W}$, VMAB, and $\overline{RESET}$.

The PIA is selected when $\overline{PIA1}$, produced by the chip select logic, goes low. When the chip is selected by $\overline{PIA1}$, and VMAB is high, data may be transferred between the MPU and the PIA over D0 through D7.

The MPU can address six locations within the PIA: two Control Registers (CRA and CRB), two Data Direction Registers (DDRA and DDRB) and two Peripheral Registers. The MPU addresses these locations with the signals AB0, AB1, bit 2 of Control Register A, and bit 2 of Control Register B, as shown in table 4-5.

Peripheral Register A is used to latch data sent from the MPU to the 8-to-1 Mux and 4-to-16 decoder.

Peripheral Register B is used to latch the signals $\overline{CAPITAL}$ $\overline{LAMP}$ ($\overline{CAPLMP}$), DEBOUNCE DELAY (DEBDLY), PAGE1 (PAG1), DATA TERMINAL READY (DTR), $\overline{SECONDARY}$ $\overline{READY}$ $\overline{TO}$ $\overline{SEND}$ ($\overline{SCA}$), $\overline{SECONDARY}$ $\overline{DATA}$ $\overline{CARRIER}$ $\overline{DETECT}$ ($\overline{SCF}$), CONTROL, and SHIFT to or from the MPU.

The Control Registers are used to control DEBTRG and BUZZER. The Control Registers are also used to address the other PIA registers.

The MPU transfers data to the 8-to-1 MUX or 4-to-16 decoder by placing the data to be transferred on D0 through D6, then addressing Peripheral Register A using AB0, AB1, and bit 2 of Control Registes A and B.

After Peripheral Register A is addressed, R/$\overline{W}$ is pulled low and VMAB goes high enabling the PIA. The data on D0 through D6 is then placed in Peripheral Register A and routed to the 8-to-1 MUX and 4-to-16 decoder.

The signals DEBDLY, CONTROL, and SHIFT are read by the MPU when Peripheral Register B is addressed, R/$\overline{W}$ is high, and the PIA is enabled causing bits 1, 5, 6, 7 of Peripheral Register B to be placed on the Data Bus.

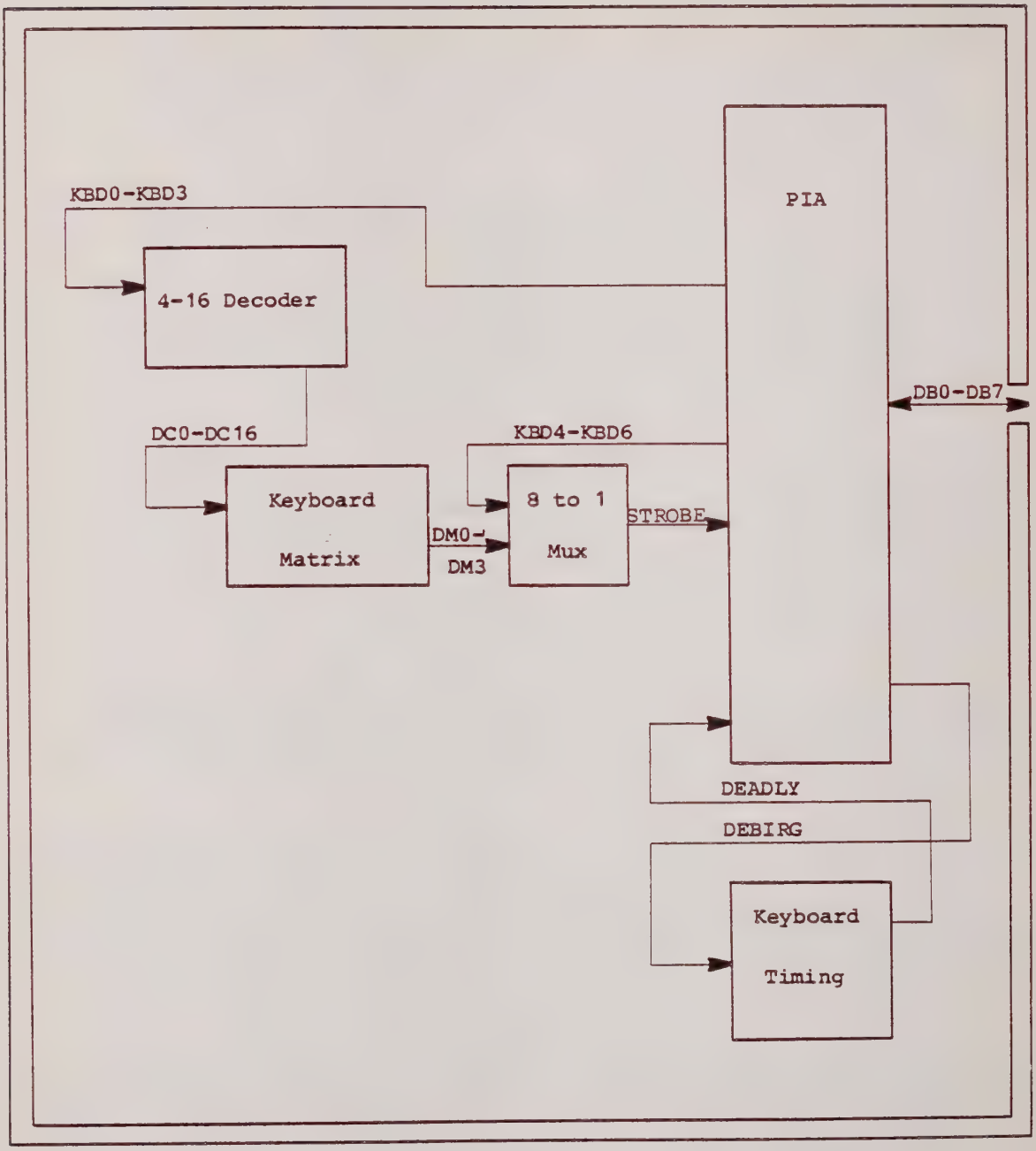

Figure 4-8. Keyboard Section Block Diagram

Table 4-5. MPU Selection of PIA Registers

AB0	AB1	CRA-2	CRB-2 (Control Register A and B -- bit 2)	LOCATION ADDRESSED
0	0	1	x	Peripheral Register A
0	0	0	x	Data Direction Register A
0	1	x	x	Control Register A
1	0	x	1	Peripheral Register B
1	0	x	0	Data Direction Register B
1	1	x	x	Control Register B

0 = low
1 = high
x = don't care

The MPU controls $\overline{\text{CAPLMP}}$, DTR, PAG1, and $\overline{\text{SCA}}$ by placing the value of the signal on the Data Bus, addressing Peripheral Register B, setting R/$\overline{\text{W}}$ low, and enabling the PIA.

The signal $\overline{\text{RESET}}$, when low, initializes the PIA by setting all bits of the PIA registers to zero. During the system reset routine, which the MPU executes following $\overline{\text{RESET}}$ going low, the direction of the PIA ports PA0 through PA7 and PB0 through PB7 are determined by writing a 0 or 1 into the seven bits of DDRA and DDRB. A DDR bit set at 0 indicates that the corresponding port is an input; a 1 indicates an output.

During the system reset routine, DDRA and DDRB are configured as shown in table 4-6.

Table 4-6. DDRA and DDRB System Reset Configurations

DDRA BIT	0	1	2	3	4	5	6	7
Corresponding PIA Port 1 = output, 0 = input	PA0 1	PA1 1	PA2 1	PA3 1	PA4 1	PA5 1	PA6 1	PA7 0

DDRB BIT	0	1	2	3	4	5	6	7
Corresponding PIA Port 1 = output, 0 = input	PB0 1	PB1 0	PB2 1	PB3 1	PB4 1	PB5 0	PB6 0	PB7 1

4.7.3 4-to-16 Decoder 3K (Schematic P10)

The 4-to-16 Decoder receives the lower four bits (KB0 through KB3) of the scan count generated by the MPU and causes one output of the 16 vertical matrix lines to go low.

4.7.4 8-to-1 Multiplexer 2K (Schematic P10)

The 8-to-1 Multiplexer receives the upper three bits of the scan count and addresses one of the eight horizontal lines of the keyboard matrix. If a key is pressed, the low level on the intersecting vertical line causes STROBE to go high.

4.7.5 Keyboard Matrix (Schematic P10)

The Keyboard Matrix contains the 87 ADM-31 key switches which generate the codes for alphabetic, numeric, symbol, and control characters.

4.8 VIDEO SECTION DETAILED BLOCK DESCRIPTION

The Video Section generates and controls the data displayed by the ADM-31 CRT monitor. A block diagram of the Video Section is presented in figure 4-9.

4.8.1 Video Section Overview

The Video Section consists of a CRT controller, Row/Column-to-Linear Conversion block, Address Select Multiplexer, Row Address Strobe/Column Address Strobe Multiplexer, 4K of Refresh Data RAM, Data Buffer and Data Latch, Character Generator, Video Logic, and a CRT Monitor.

Data to be displayed and data used to control the operation of the CRT controller is routed to the CRT controller over D0 through D7 and AB0 through AB3.

The CRT controller formats the display data and generates the signals HORIZONTAL SYNCHRONIZE (HSYNC), VERTICAL SYNCHRONIZE (VSYNC), and COMPOSITE SYNCHRONIZE (CSYNC), which are routed to the Video Logic.

The formatted display data in row/column form is presented to the Row/Column-to-Linear Converter and converted to linear form. The linear data is then routed to the Address Selector. From the Address Selector, the data is input to the Row/Column Address Selection Multiplexer and used as address inputs to the Refresh RAM. Data from the Refresh RAM is either routed to the MPU via the Data Bus or sent to the Character Generator.

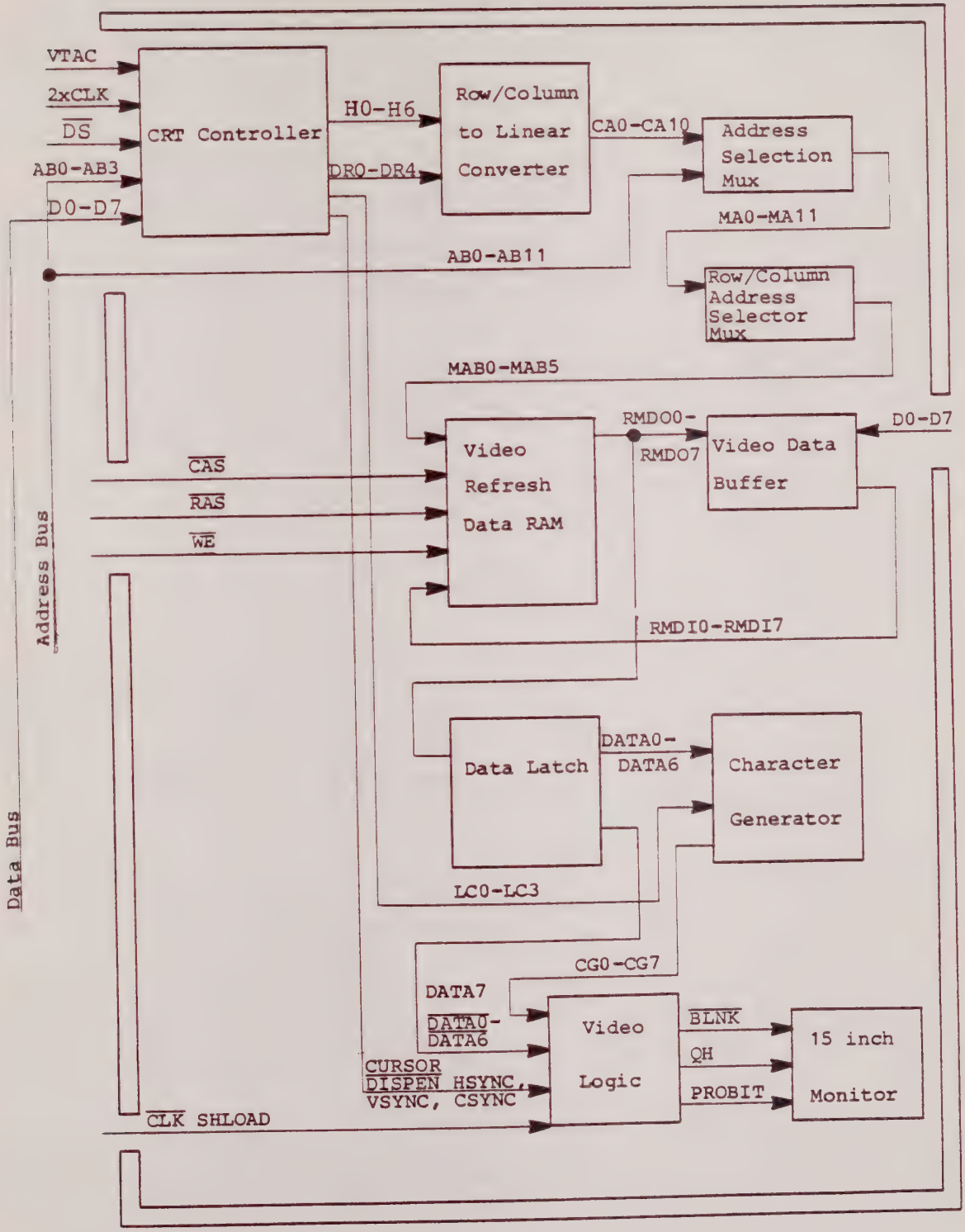

Figure 4-9. Video Section Block Diagram

The Character Generator retrieves the data needed to display the character on the CRT screen and sends it to the Video Logic where it is conditioned to be displayed on the CRT Monitor.

4.8.2 CRT Controller 8B (Schematic P6)

The CRT Controller is an MPU programmable device which contains logic necessary to generate timing signals and perform data formatting operations for the CRT Monitor.

The CRT Controller contains nine interface registers. These registers are used to hold such information as the line count, characters per data row, data rows per frame, raster scans per row, and raster scans per frame. The MPU places data in these registers by addressing one of the nine internal registers using AB0 through AB3, selecting the CRT Controller using VTAC, placing the data to be stored in the address register on D0 through D7, and strobing the data into the register when $\overline{DS}$ goes low.

The nine interface registers contain the following information:

CHARACTERISTIC	VALUE
Char/Line	102
Char/Data Row	80
Scan/Data Row	12
Data Row/Frame	25
Scan/Frame	320 for 60 Hz 384 for 50 Hz

The character address outputs (H0 through H6) and data row outputs (D0 through D4) from the CRT Controller are routed to the Row/Column-to-Linear Converter where they are converted from a row/column form to a linear form.

The timing signal 2xCLK, (1.9584 MHz) produced by the Two-Phase clock, establishes the character clock rate for the CRT Controller by functioning as a dot counter carry.

CURSOR (CUR) is the Cursor Video signal and defines the cursor location in the CRT data field.

$\overline{\text{DISPLAY ENABLE}}$ ($\overline{\text{DISPEN}}$) is used in the Video Logic block to enable or disable the display of a null character.

HORIZONTAL SYNCHRONIZE (HSYNC) (19.2 KHz) and VERTICAL SYNCHRONIZE (VSYNC) (60 Hz for 60 Hz) operation initiate the horizontal and vertical retrace of the CRT screen. The signal COMPOSITE SYNCRONIZE (CSYNC) is used to drive the Composite Video circuit.

The Scan Counter outputs (LC0 through LC3) provide row selection for the character generator. The least significant bit (LC0) defines the odd and even fields so as to select the even scan line (bit = 1) during the even field and the odd scan line (bit = 0) during the odd field.

4.8.3 Row/Column To Linear Converter (Schematic P6)

The Row/Column to Linear Converter block contains 256-bit ROM 10B and two 4-bit adders 8D, 9D which change the Data RAM addresses from the row/column form produced by the CRT Controller to the linear form used by the Address Selector and Row/Column Address MUX Logic.

This block uses the CRT Controller outputs H0 through H6 and DR0 through DR4 to produce CA0 throuch CA10.

4.8.4 Address Selection MUX 8E, 9E, 10F (Schematic P3)

The Adress Selection MUX selects the source of the address used to retrieve data from the Refresh Memory.

The MUX receives as inputs CA0 through CA10 from the CRT Controller, PAG1 from the Keyboard PIA, and AB0 through AB11 from the Address Bus.

If CRTRAM, produced by the Address Select logic, is high, CA0 through CA10 and PAG1 are placed on MA0 through MA11 and routed to the Row/Column Address MUX to be used as the Refresh RAM address. If CRTRAM is low, AB0 through AB11 are placed on MA0 through MA11 and used as the Refresh RAM address.

4.8.5 Row/Column Address Multiplexer 6E, 7E (Schematic P3)

The Row/Column Address Multiplexer is used to gate the row and column addresses to the Refresh RAM.

The multiplexer receives as input MA0 through MA11 from the Address Selector and SELECT RAS (SELRAS) from the $\overline{RAS}$-$\overline{CAS}$ logic.

When SELRAS is high, the Refresh RAM row address (MA0 through MA5) is placed on MAB0 through MAB5. MAB0 through MAB5 are used as address inputs to the Refresh RAM.

4.8.6 Video Refresh Data RAM 4F-7F, 4H-7H (Schematic P4)

The Video Refresh Data RAM contains the data that is displayed on the CRT screen.

When the signal $\overline{\text{WRITE ENABLE}}$ ($\overline{\text{WE}}$) is low, the data specified by REFRESH MEMORY DATA IN 0 (RMDI0) through REFRESH MEMORY DATA IN 7 (RMDI7) is written to the RAM address specified by MAB0 through MAB5. When $\overline{\text{WE}}$ is high, data from the address denoted by MAB0 through MAB5 is read from the RAM and placed on REFRESH MEMORY DATA OUT 0 (RMDO0) through REFRESH MEMORY DATA OUT 7 (RMDO7).

$\overline{\text{ROW ADDRESS STORBE}}$ ($\overline{\text{RAS}}$) and $\overline{\text{COLUMN ADDRESS STORBE}}$ ($\overline{\text{CAS}}$) are active low inputs which specify whether the address on MAB0 through MAB5 is a row address or column address.

4.8.7 Refresh Memory Data Buffer 2H, 3H and Latch 7J, 7K (Schematic P5)

The Refresh Memory Data Buffer and Latch are used to transfer data between the Video Refresh Data RAM and the Data Bus, Character Generator, and Video Logic.

When $\overline{\text{WE}}$ to the Video Refresh Data RAM is high, the Refresh Memory Data Buffer receives RMDO0 through RMDO7 from the Video Refresh Data RAM and outputs D0 through D7, which are placed on the Data Bus. RMDO0 through RMDO7 are also gated to the Data Latch where they are used to generate DATA0 through DATA6. DATA0 through DATA6 and DATA7 are also output from the Data Latch and are routed to the Video Logic.

When $\overline{\text{WE}}$ to the Video Refresh Data RAM is low, the Refresh Memory Data Buffer receives as input D0 through D7 and outputs RMDI0 through RMDO7 which are sent to the Video Refresh Data RAM.

4.8.8 Character Generator 1F (Schematic P5)

The Character Generator consists of an EPROM which is programmed with the 128 upper and lower case displayable characters in the ASCII Code.

The character to be displayed is specified by the inputs DATA0 through DATA6 produced by the Refresh Memory Data Buffer and Data Latch. The raster line count is specified by LC0 through LC3.

The Character Generator uses LC0 through LC3 and DATA0 through DATA6 as address inputs and outputs CHARACTER GENERATOR 0 through CHARACTER GENERATOR 7 (CG0 through CG7) which are routed to the Video Logic.

4.8.9 Video Logic (Schematic P6)

The Video logic conditions the data containing the character to be displayed, character attributes, and display attributes into the signal COMPOSITE VIDEO which is displayed on the CRT.

The Video logic is also used to produce HSYNC and $\overline{\text{VDRIVE}}$ which are routed to the CRT Monitor.

Information produced by the Character Generator is routed to the Video logic over CG0 through CG7. This information is latched into the shift register (chip 1E) when SHIFTER LOAD (SHLOAD) is high. From the shift register, the data is clocked out at a rate determined by $\overline{\text{CLK}}$ and used to produce COMPOSITE VIDEO.

The signal $\overline{\text{BLANK}}$ ($\overline{\text{BLNK}}$) is used to turn off the screen during retrace.

The Null Detect Circuit gives the user the option of displaying or inhibiting the display of a null character. The Null Detect Circuit decodes $\overline{\text{DATA0}}$ through $\overline{\text{DATA6}}$ and the state of the Disnul switch to determine if null characters will be displayed on the screen.

DATA7 is used by the Video Logic to produce the signal PROTECT BIT (PROBIT). If a character is to be displayed in a protected area of the CRT, the seventh bit of the character code is set high. When the Video logic detects that the seventh bit of a character (DATA7) is high, PROBIT goes high causing the Monitor to display the character at a reduced intensity.

4.9 SYSTEM CONFIGURATION SWITCH SECTION DETAILED BLOCK DESCRIPTION

The System Configuration Switch Section contains four banks of switches used to determine the system configuration. A block diagram of the System Configuration Switch Section is shown in figure 4-10.

4.9.1 Switch Bank 1 K10 and Buffer 10J, 10K (Schematic P8)

Switch Bank 1 (S2) has seven active switches which are used to place low level bits into buffers 10J, 10K. When selected by $\overline{\text{SWBNK1}}$ from the MPU, the high-level (switch open) or low-level (switch closed) bits are transferred to D0 through D7 on the Data Bus. The seven switches control the following functions:

- SW 1 controls the operation of the keyboard BREAK key: OFF disables the key; ON enables the key

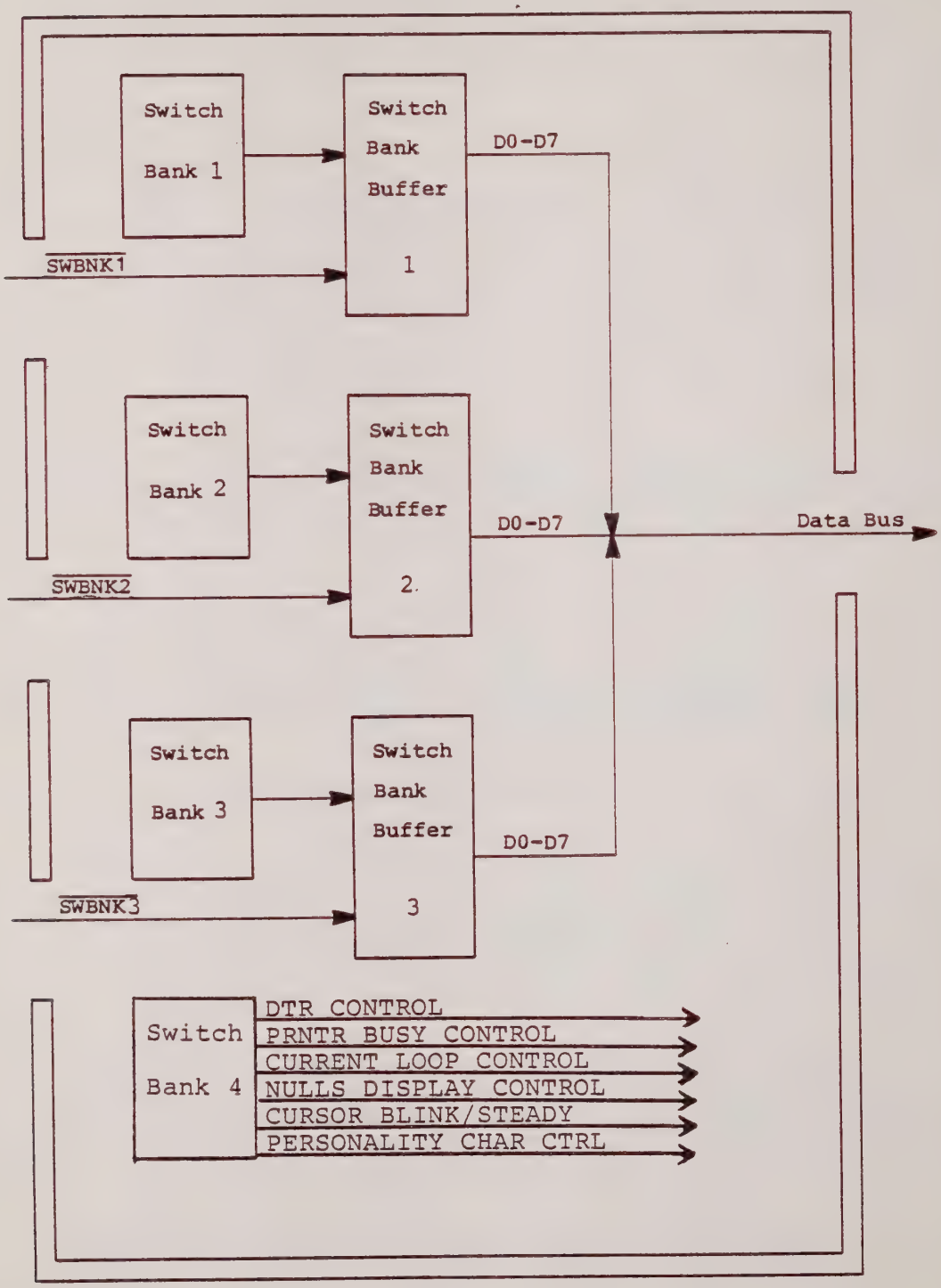

Figure 4-10. System Configuration Switch Select Block Diagram

- SW 2 controls the monitor refresh rate: OFF for 60 Hz line frequency; ON for 50 Hz frequency

- SW 3, 4, 5 control the MODEM interface word structure, in accordance with the settings shown in table 4-7.

- SW 7 controls the basic ADM-31 transmission mode: OFF for Conversation Mode; ON for Block Mode. The transmission mode may be dynamically changed by an escape sequence.

- SW 8 OFF establishes Conversation Mode Half Duplex operation; ON establishes Conversation Mode Full Duplex operation. Half or Full Duplex operation may be dynamically selected by an escape sequence.

4.9.2 Switch Bank 2 K11 and Buffer 11J, 11K (Schematic P11)

Switch Bank 2 (S3) has three active switches which are used to place low-level bits into buffer 11J, 11K. When selected by SWBNK2 from the MPU, the buffer places high-level (switch open) or low-level (switch closed) bit on D0 through D7 of the Data Bus. The three switches control the AUXILIARY (Printer) port word structure in accordance with table 4-7.

Table 4-7. MODEM or Printer Interface Word Configuration

WORD CONFIGURATION			CONFIGURATION SWITCHES		
DATA BITS	PARITY	STOP BITS	SW3	SW4	SW5
7	Even	2	ON	ON	ON
7	Odd	2	OFF	ON	ON
7	Even	1	ON	OFF	ON
7	Odd	1	OFF	OFF	ON
8	No	2	ON	ON	OFF
8	No	1	OFF	ON	OFF
8	Even	1	ON	OFF	OFF
8	Odd	1	OFF	OFF	OFF

4.9.3 Switch Bank 3 K12 and Buffer 12J, 12K (Schematic P11)

Switch Bank 3 (S4) is operational only when the Polling Option is exercised. The eight active switches will be used to place low-level bits into buffer 12J, 12K. When selected by $\overline{SWBNK3}$ from the MPU, the buffer would place high-level or low-level bits on D0 through D7 of the Data Bus. SW 1 through SW7 control the polling address (SW 1 expresses the LSB); Switch ON = 0, Switch OFF = 1. (A typical polling address = 000_8.) SW 8 OFF enables the Polling Option; ON disables the option.

4.9.4 Switch Bank 4 A12 (Schematic P5, P6, P8, P11)

Switch Bank 4 has eight active switches, which operate as follows:

- SW 1 controls the DATA TERMINAL READY line through AUXILIARY interface port J3. ON enables the line; OFF disables the line

- SW 2 and SW 3 control the Printer BUSY line through AUXILIARY interface port J3, as follows:

  SW 2 ON & SW 3 OFF = BUSY Acitve (Not Ready) high

  SW 2 & SW 3 ON = BUSY Active (Not Ready) low

  SW 2 & SW 3 OFF = BUSY Disabled

- SW 4 and SW 5 control the current loop/secondary channel interface, as follows:

  SW 4 ON & SW 5 OFF = Current Loop Enabled

  SW 4 OFF & SW 5 ON = Secondary Channel Enabled

  SW 4 & SW 5 OFF = Current Loop and Secondary Chanel Disabled

- SW 6 controls how NULL characters will be displayed on the CRT: ON displays NULLS as spaces; OFF displays NULLS as NULLS. This characteristic may be changed dynamically by an escape sequence.

- SW 7 OFF causes the cursor remain steady; ON causes the cursor to blink.

- SW 8 controls CRT display of the personality attribute character: ON causes character to be displayed; OFF causes a space to be displayed instead of character

SECTION 5

MAINTENANCE

5.1 INTRODUCTION

This section contains information and instructions for performing routine and corrective maintenance for the ADM-31.

The maintenance technician should be thoroughly familiar with the information contained in Sections 1-4 of this manual before attempting to perform any of the procedures outlined in this section.

5.2 PREVENTIVE MAINTENANCE

The only preventive maintenance required on the ADM-31 is the occasional cleaning of the exterior surfaces, and periodic visual inspections.

The ADM-31 casing should be cleaned using a household cleaner and a paper towel or a soft, lint-free cloth. NEVER use lighter fluid or other petroleum based solvents to clean the casing. Damage to the plastic or painted surfaces could result. In addition, avoid wiping dust into the keyboard and do not let spray cleaner run between the keys.

Periodically, inspect switches and keyboard assembly for freedom of movement. Determine that intensity of character trace on the CRT screen has not diminished. Any required mechanical and electrical adjustment shall only be performed by an authorized Lear Siegler service representative.

5.3 CORRECTIVE MAINTENANCE

This section contains information for performing corrective maintenance on the ADM-31 Display Terminal.

5.3.1 Problem Identification

When it is determined that the ADM-31 is not functioning correctly, the following procedures and the procedures shown in table 5-1 should be followed:

1. Determine the state of the machine when the fault occurred. Check for operator error, blown fuses, loose connectors; modem or computer failure. Failure is often caused by one or more of these items.

2. Operate the ADM-31 to determine which functions have failed. For example, does the terminal transmit but not receive? Are characters correctly displayed on the screen? Has a single function such as BACKSPACE or INSERT LINE failed?

3. Isolate the cause of the failure to a specific module such as the Keyboard assembly, CRT, or Main Circuit Board.

4. Perform the required adjustments or replace the malfunctioning module.

Table 5-1. ADM-31 Troubleshooting Guide

SYMPTOM	CAUSE	ACTION
Terminal will not power up.	No AC power to terminal. Fuse Blown.	Check power connection to wall receptacle. Replace fuse.
Monitor dark or cursor does not appear in upper left corner of screen after 20 second warm-up period.	Video screen not properly adjusted or faulty Monitor board. Main PCBA.	Press HOME key. Press CTRL/G (Beep). Adjust brightness and contrast controls. Check cable connections between Monitor and PCBA. Replace Monitor Board.
Character entered from keyboard not displayed on CRT screen.	Faulty keyboard switch.	Check operation of key. If necessary, remove and replace key switch contacts.

Table 5-1. ADM-31 Troubleshooting Guide (cont'd)

SYMPTOM	CAUSE	ACTION
		Check for foreign material between keys.
Incorrect or random characters displayed on screen.	Incorrect BAUD RATE switch swttings. Faulty modem.	Set BAUD RATE switches to correct position. Check operation of modem.
Display not vertically aligned on screen.	Video screen vertical drive improperly adjusted.	Perform vertical adjustments described in Appendix C.
Display not horizontally aligned on screen.	Improper horizontal adjustment.	Perform horizontal adjustments described in Appendix C.
Display out of focus.	Focus control incorrectly adjusted.	Adjust focus as outlined in Appendix C.
Raster improperly centered.	Ring magnets incorrectly adjusted.	Follow procedures outlined in Appendix C.
Editing functions not working.	Possible CPU or system ROM malfunction.	Replace Main PCBA.
Terminal will not transmit or receive data.	Malfunctioning modem.	Check modem operation. Check operation of remote computer.

5.3.2 Removal and Replacement

Removing and Replacing the Main PCBA

To remove the Main PCBA, proceed as follows:

1. Remove the external interface connection(s) at the rear of the ADM-31.

2. Open the terminal cover.

3. Remove all cable connectors from the upper surface of the circuit board.

4. Lift the board straight up until it is clear of the guide pins, then remove the board from the base.

To replace the Main PCBA, perform these procedures in reverse order.

Removing and Replacing Key Switch Contacts

The tools required to remove the key switch contacts from the keyboard are:

- Insertion tool and guide
- Soldering iron (low temperature)
- Wicking device
- Short-nosed needle nose pliers with serrated jaws

The procedure is as follows:

1. Remove the Main PCBA.

2. Remove the solder from the contact (dewick) with a low-heat soldering iron so as not to damage circuit pads. The contacts will protrude about 1/32 inches beyond the back of the logic board. Make sure that the contacts are completely free of any solder by brushing them with your finger. The contacts should move freely.

3. Turn the board over so that the keyboard is up.

4. Remove the key top whose contacts need to be replaced.

CAUTION

The plunger is fragile; pulling to the side can break plunger or housing.

5. With the pliers, firmly grasp the plunger in the corner (see figure 5-1). Pull straight up firmly.

6. Remove the spring.

7. With the pliers, grasp the contact and pull vertically; remove both contacts.

8. Place the insertion tool guide in the switch housing, making sure that the keyway is towards the front of the keyboard (see figure 5-2).

9. Insert the solid contact (P/N 373-30052-2) in the insertion tool with the bend to the outside and the solder end up (see figure 5-3). Insert the split contact (P/N 373-30053-2) with the split end in first (see figure 5-4).

10. Place the insertion tool into the guide matching keyway slot and key. Press the tool firmly straight down until the contacts are seated and the tool clicks (see figure 5-5).

11. Remove the tool and the guide.

12. Replace the spring.

13. Replace the plunger, making sure that the bar is parallel with the contact opening. Work the plunger down slowly, separating the contacts with the crossbar of the plunger (see figure 5-6).

14. Press the plunger firmly down until it is seated. The plunger will click.

15. Replace the key top.

16. Turn the board over and verify that the contacts extend about 1/32 inch past the board.

17. Resolder the contacts in place.

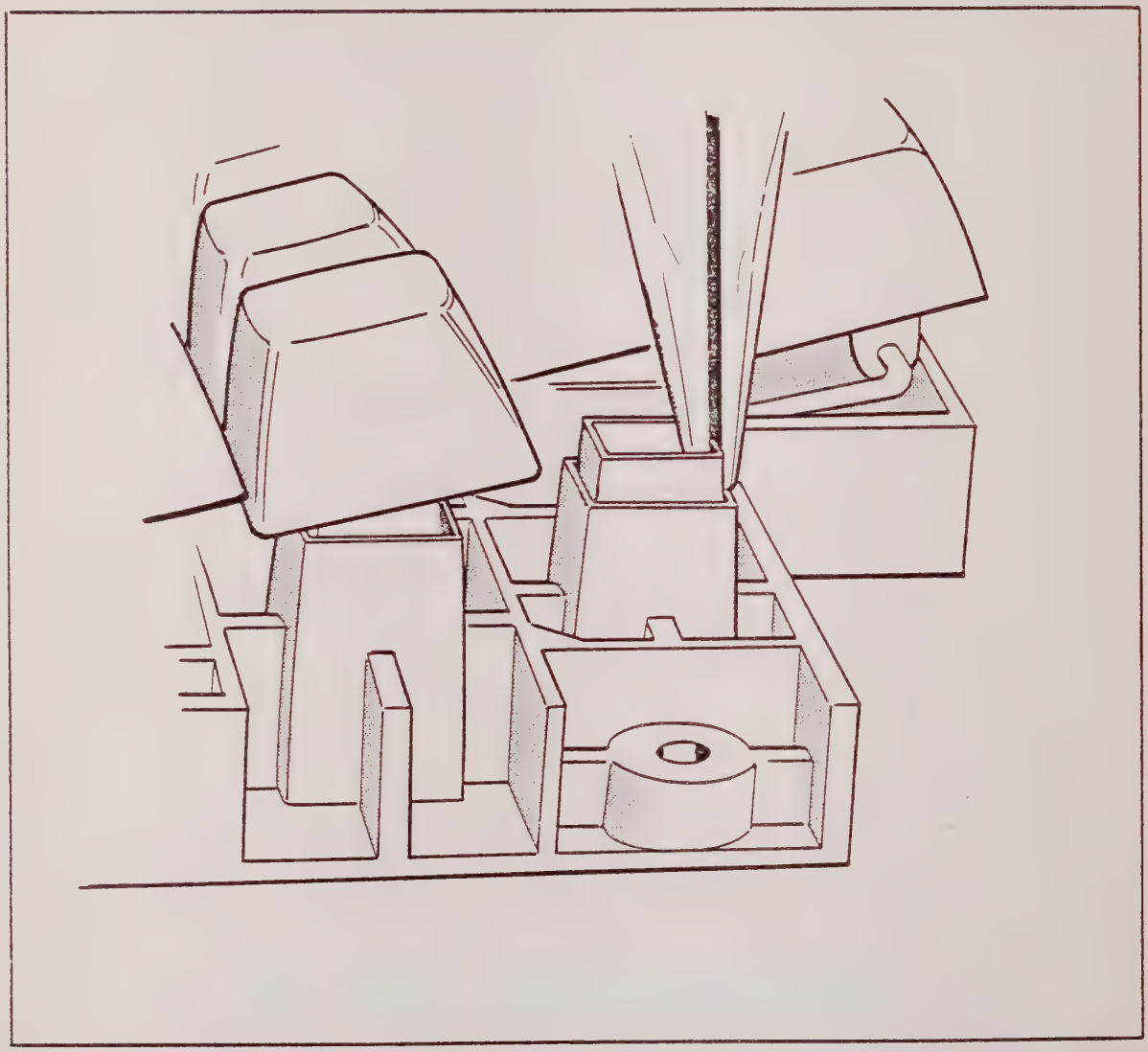

Figure 5-1. Removing The Plunger

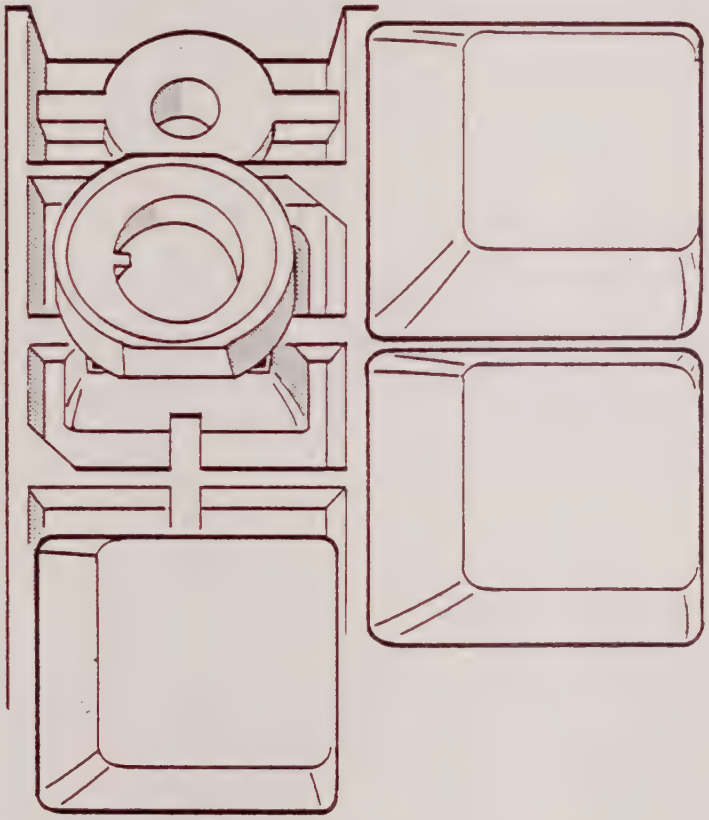

Figure 5-2. Insertion Tool Guideway

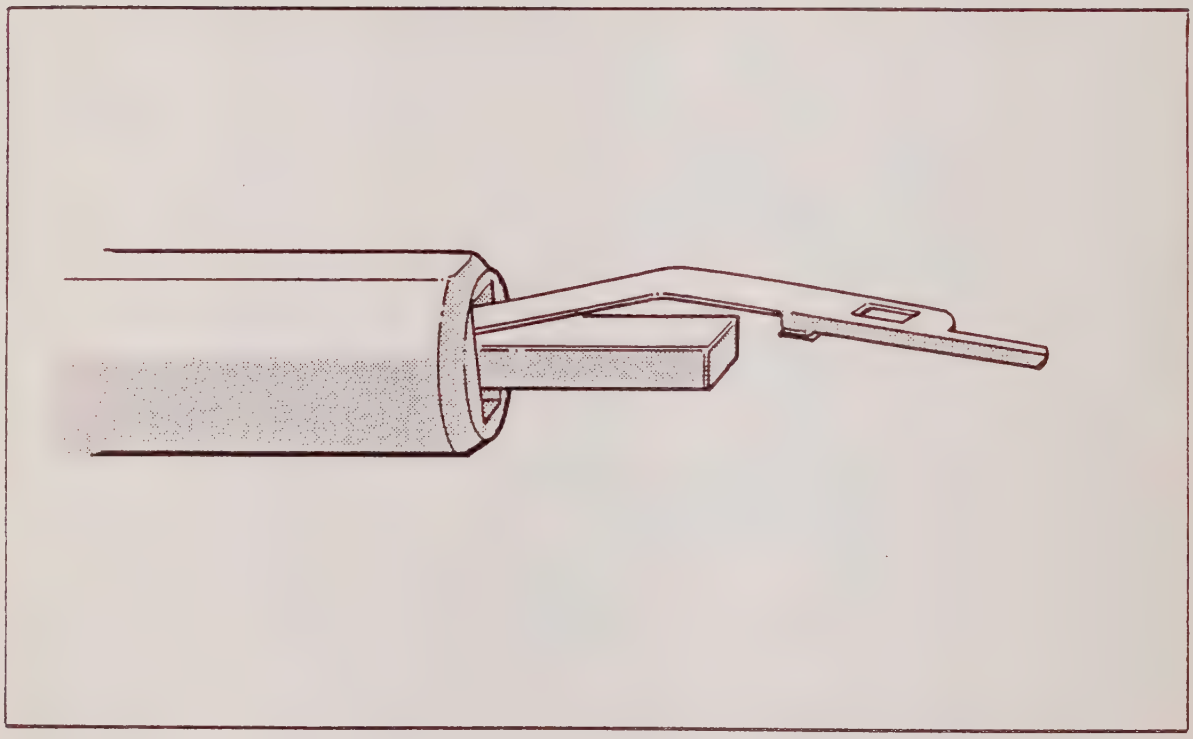

Figure 5-3. Placing The Solid Contact In The Insertion Tool

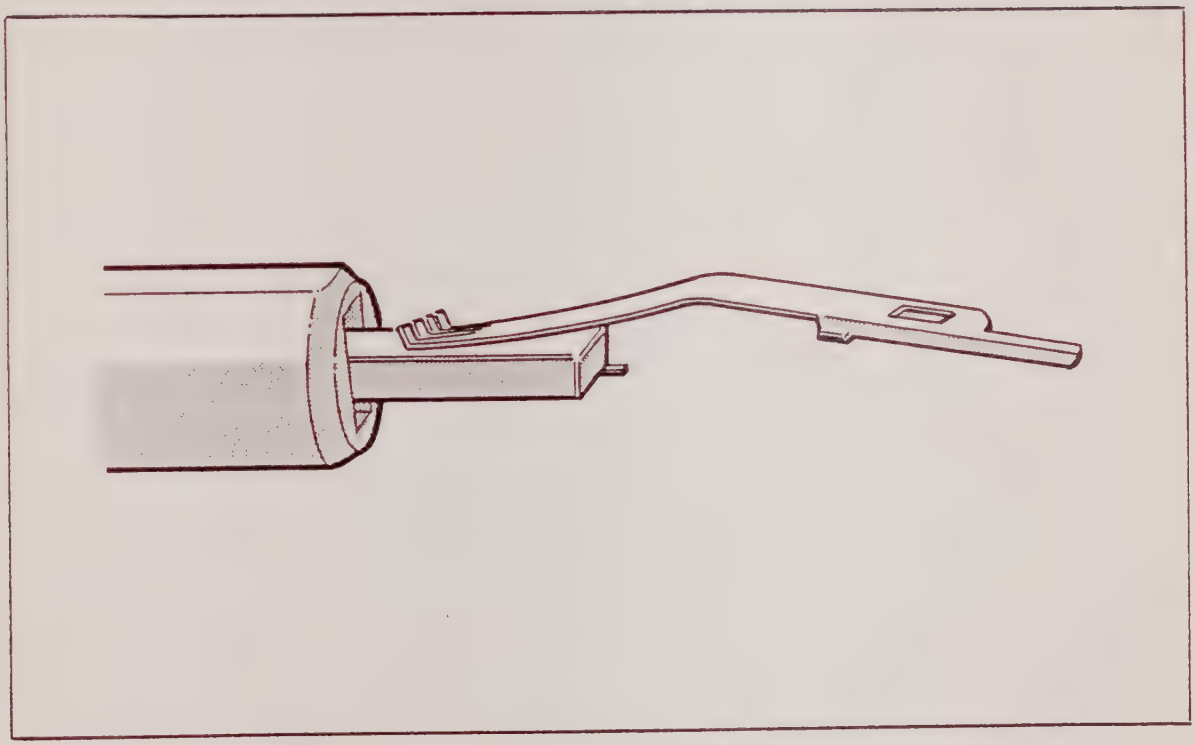

Figure 5-4. Inserting The Split Contact In The Insertion Tool

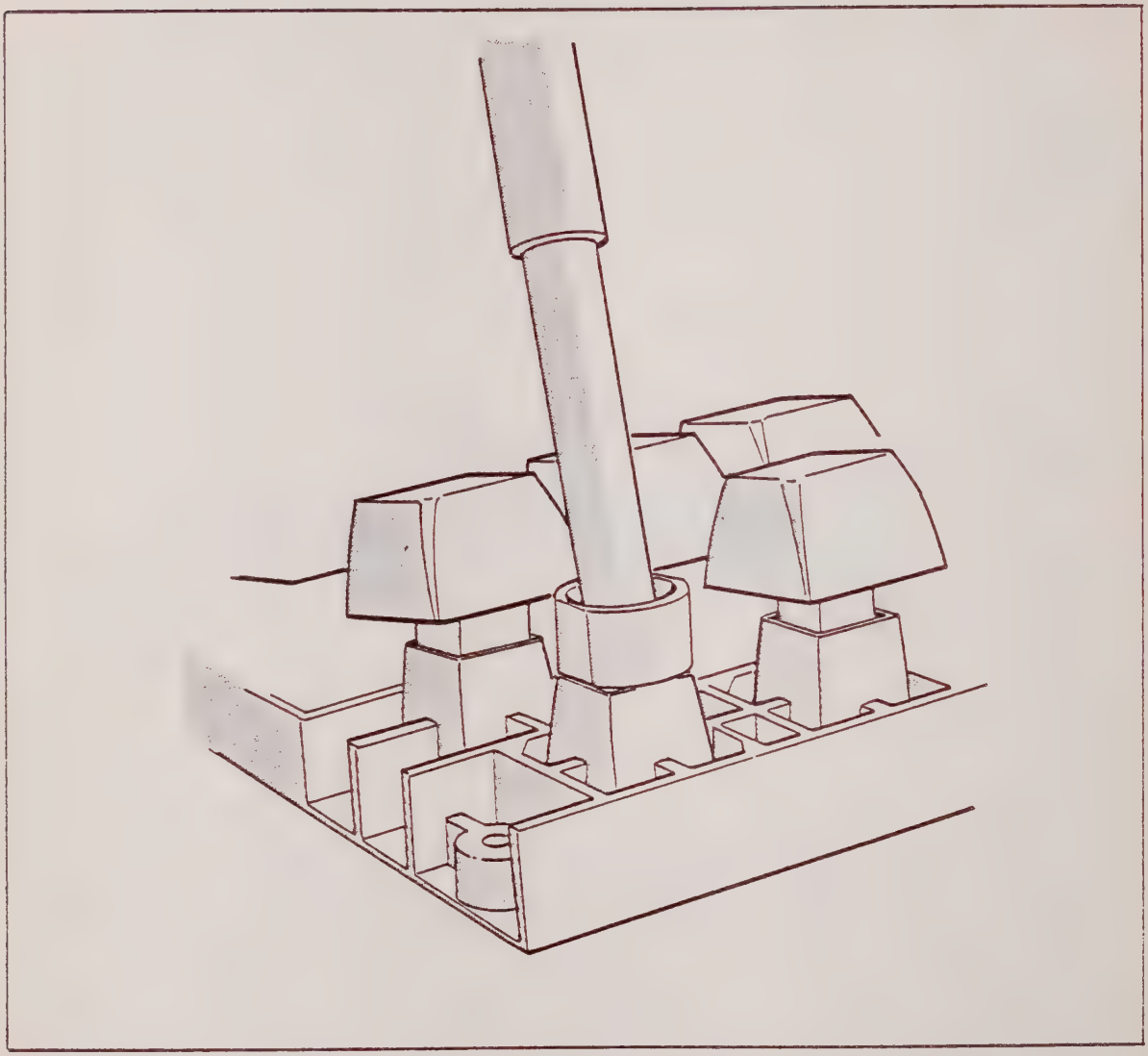

Figure 5-5. Placing The Insertion Tool Into The Guide

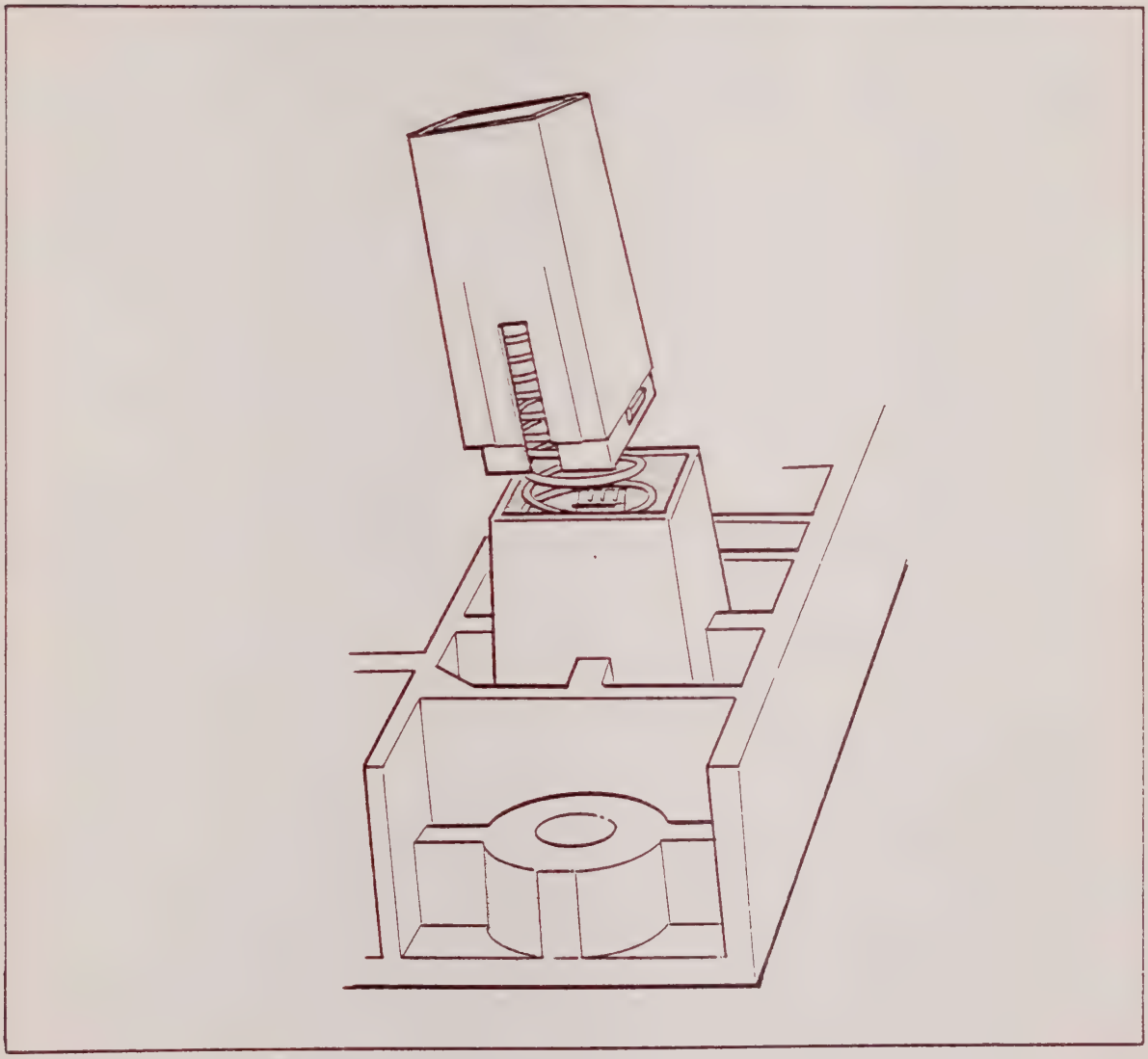

Figure 5-6. Replacing The Plunger

Removal and Replacement of the Monitor

The CRT with its steel mounting frame, the flyback assembly and the circuit board comprise what is known as the ADM-31 Monitor.

WARNING

Discharge anode voltage to ground before attempting to remove the CRT, flyback assembly or circuit board.

To remove the CRT, proceed as follows:

1. Unhook both ends of the spring that is positioned across the CRT.
2. Remove the connector from the base of the CRT.
3. Remove the anode connector from the lower surface of the CRT.
4. Using a screwdriver or socket wrench, loosen the clamps on both sides of the CRT frame. Turn the clamps to clear the frame.
5. Grasp the CRT securely and lift it upwards, then out of the ADM-31 cover.

To install a new CRT, follow the preceding steps in reverse order.

To remove the flyback assembly, proceed as follows:

1. Disconnect the anode connector from the CRT.
2. Disconnect the Molex connector that connects the flyback assembly to the monitor circuit board.
3. Use a screwdriver to loosen the hex-head screw that clamps the flyback assembly to the molded cover.
4. Lift the flyback assembly upwards until the screw clears the slot in the mounting plate. Remove assembly from the cover.

To remove the monitor circuit board, proceed as follows:

1. Remove the flyback assembly.

2. Disconnect all Molex connectors from the monitor circuit board.

3. Slide circuit board from the slots in the molded cover and remove.

To replace monitor circuit board and flyback assembly, perform the preceding steps in reverse order.

Removal and Replacement of Switching Power Supply

Refer to Removal/Replacement instructions for ADM-31 Switching Power Supply, Appendix D.

5.3.3 Adjustments

The Monitor Assembly (TTL Data Display 120/150) is the only ADM-31 component which requires adjustment.

Opening The ADM-31 Cover

All adjustments to the ADM-31, except the contrast adjustment, must be performed with the terminal cover opened or removed. To open the terminal cover, proceed as follows:

1. Remove the two slot head screws located under the front corners of the terminal base.

2. Disconnect the external interface connection(s) at the rear of the ADM-31.

3. Lift the cover upwards and rearwards from the front until it is lowered to rest on the table.

4. To remove the cover, disconnect the cable connecting the Main PCBA to the Monitor. Slide the cover toward the left until it is free of the hinge pins, then lift the cover from the base.

Note that the cover should not be removed for adjustments required on the ADM-31.

Monitor Adjustments

Refer to the Service Manual for the TTL Data Display 120/150 in Appendix C.

SECTION 6

DRAWINGS

This section contains ADM-31 Display Terminal Logics and Assembly Drawings, as follows:

129541	(6 Shts)	Configuration Control ADM-31
129860	(Sht 1)	Main PC Board Assembly - 7 Layout
129860	(Sht 3)	Main PC Board Assembly - 5 Layout
129861-5	(12 Shts)	ADM-31 Schematic-5 PCBA
129861-7	(12 Shts)	ADM-31 Schematic-7 PCBA
129868	(4 Shts)	Power Cable Assembly ADM-31
129869	(3 Shts)	Monitor Cable Assembly ADM-31
129872	(5 Shts)	Prom Adapter PCBA, ADM-31

Firmware

Esc 09 (small 0) — Firmware version

12.11 STD Non Polling - 2 proms

V.200 Polling - 3 proms

V 293

V 300

Soon To be Released
July?

4 prom Polling - Non Polling 3

Polling Terminal Requires Header Code
96 Possable Address (single Address)

REVISIONS

LTR	SHEET	DESCRIPTION	DATE	APPROVED
A		INC ADCN 1 REDRAW SHT 1 & 2 OPT 2 ADD #10, OPT 3 ADD #4 OPT 4 ADD #6, OPT 5 ADD #3 W. Kelly 11-27-78	11-27-78 11-27-78	W. Kelly H. Durne

CONTENTS

	DESCRIPTION	SHEET
OPT 1	PROM/ROM TABULATION	2
OPT 2	PRINTER	3
OPT 3	POLLING	4
OPT 4	COMPOSITE VIDEO	5
OPT 5	ANSWER BACK	6

DASH NO.	NEXT ASSY	USED ON
		DL129504

APPLICATION

UNLESS OTHERWISE SPECIFIED
DIM. IN INCHES
TOLERANCES
.X ± .1
.XX ± .03
.XXX ± .010
ANGLES ± 0.5°
MACH. FIN.

DR W. Kelly 8/14/78
CHK
DSGN
ENGR D. Thomson 8/25/78
PROJ
REL M. Slutzsky 8/25/78
CUSTOMER APPD

LEAR SIEGLER, INC.
ELECTRONIC INSTRUMENTATION DIV.
ANAHEIM, CALIF.

CONFIGURATION CONTROL

ADM31

SIZE A | CODE IDENT 98438 | 129541 | REV A

SCALE | SHEET 1 OF 6

PROM TABULATION

CONFIGURATION No.	PERSONALITY 129753 (825123) LOCATION 14H 129753-	PROGRAM E000 129827 (2716) LOCATION 9F 129827-	PROGRAM E800 129827 (2716) LOCATION 10F 129827-	PROGRAM F000 129827 (2716) LOCATION 11F 129827-	PROGRAM F800 129827 (2716) LOCATION 12F 129827-		
1							
2	007000	—	—	002011	002012		STD
3	009000	—	002010	002011	002012		PRINTER
4		002009	—	002011	002012		POLLING
5		002009	002010	002011	002012		PRINTER & POLLING
6							
7							
8							
9							
10							
11							
12							
13							
14							
15							
16							
17							
18							
19							
20							
21							
22							
23							
24							
25							
26							
27							
28							
29							
30							

SIZE	CODE IDENT	
A	98438	129541
SCALE		SHEET 2

Form # 10-10116

PARTS LIST

FIND NO.	QTY REQD				PART NUMBER	DESCRIPTION	LOCATION/REF DES	NOTES
1				1	206584-1	CONN. 25 PIN	A-14 (AMP)	
2				3	128533-512	5.1K	A-12.5	
3				3	128518-103	CAP .01 UF	A-12.5	
4				1	128348-1489		A-13	
5				1	129824-6850		B-13.5	
6				1	1A2160316	SWITCH	A-3 (EECO)	
7				2	128348-8T95		J-11, K11	
8				1	785-1-R4.7K	RES. MODULE 4.7K	K-11 (BECKMAN)	
9				1	1-435668-8	SWITCH 8 POS	K-11 (AMP)	
10				1	129827-00	PROM		
11								
12								
13				1	129866-5	CLOSURE		B

A. PARTS INSTALLED ON 129860 SEE DWG. FOR LOCATIONS

B. PART INSTALLS ON 129850 - REPLACES EXISTING PART.

OPTION 2	SIZE A	CODE IDENT 98438	129541	REV A
TITLE PRINTER OPTION	SCALE		SHEET 3	
SHEET 1 OF 1				

FIG NO.	QTY REQD				PARTS LIST			
					PART NUMBER	DESCRIPTION	LOCATION/REF DES	NOTES
1				1	1-435668-8	SWITCH 8 POS	K-12.5 (AMP)	
2				1	785-1-R4.7K	RES. MODULE 4.7K	K-12.5 (BECKMAN)	
3				2	128348-8T95		J-12, K-12	
4				1	129827-00	PROM		
5								
6								
7								
8								
9								
10								
11								
12								
13								

A. PARTS INSTALLED ON 129860 SEE DWG. FOR LOCATION

OPTION 3	SIZE A	CODE IDENT 98438	129541 A
TITLE POLLING OPTION			
SHEET 1 OF 1	SCALE		SHEET 4

FIND NO.	QTY REQD				PARTS LIST			
					PART NUMBER	DESCRIPTION	LOCATION/REF DES	NOTES
1				1	128533-100	10 Ω	A-3	
2				1	128533-750	75 Ω	A-3	
3				2	2N3904	TRANSISTOR	A-3	
4				1	51-153-0000	JACK	A-5 (SELECTRO)	B
5								
6				1	51-107-3059	PLUG, COAX	SEALECTRO	B/C
7								
8								
9								
10								
11								
12								
13								

A. PARTS INSTALLED ON 129860 SEE DWG. FOR LOCATION

B. IF INSTALLED ON RG59/U FOR CUSTOMER BY LSI PART NO. 51-124-3059 MAY BE SUBSTITUTED.

C. FURNISH LOOSE WITH EQUIPMENT AS PART OF THIS OPTION.

OPTION 4	SIZE A	CODE IDENT 98438	129541	REV A
TITLE COMPOSITE VIDEO	SCALE		SHEET 5	
SHEET 1 OF 1				

ITEM NO.	QTY REQD				PARTS LIST			NOTES
					PART NUMBER	DESCRIPTION	LOCATION/REF DES	
1				1	129752-00	PROM	14H	
2								
3				1	640358-1	SOCKET, 16 PIN		
4								
5								
6								
7								
8								
9								
10								
11								
12								
13								

A. PART INSTALLED ON 129860 - SEE DWG FOR LOCATION. (ON -7 & ON)

B. CODE IS DETERMINED BY CUSTOMER REQMTS - EACH MAY BE DIFFERENT - SEE DTO & INSTRUCTION _____.

OPTION 5	SIZE A	CODE IDENT 98438	129541 A
TITLE ANSWER RACK			
SHEET 1 OF 1	SCALE		SHEET 6

REVISIONS					
SHT	ZONE	LTR	DESCRIPTION	DATE	APPROVED

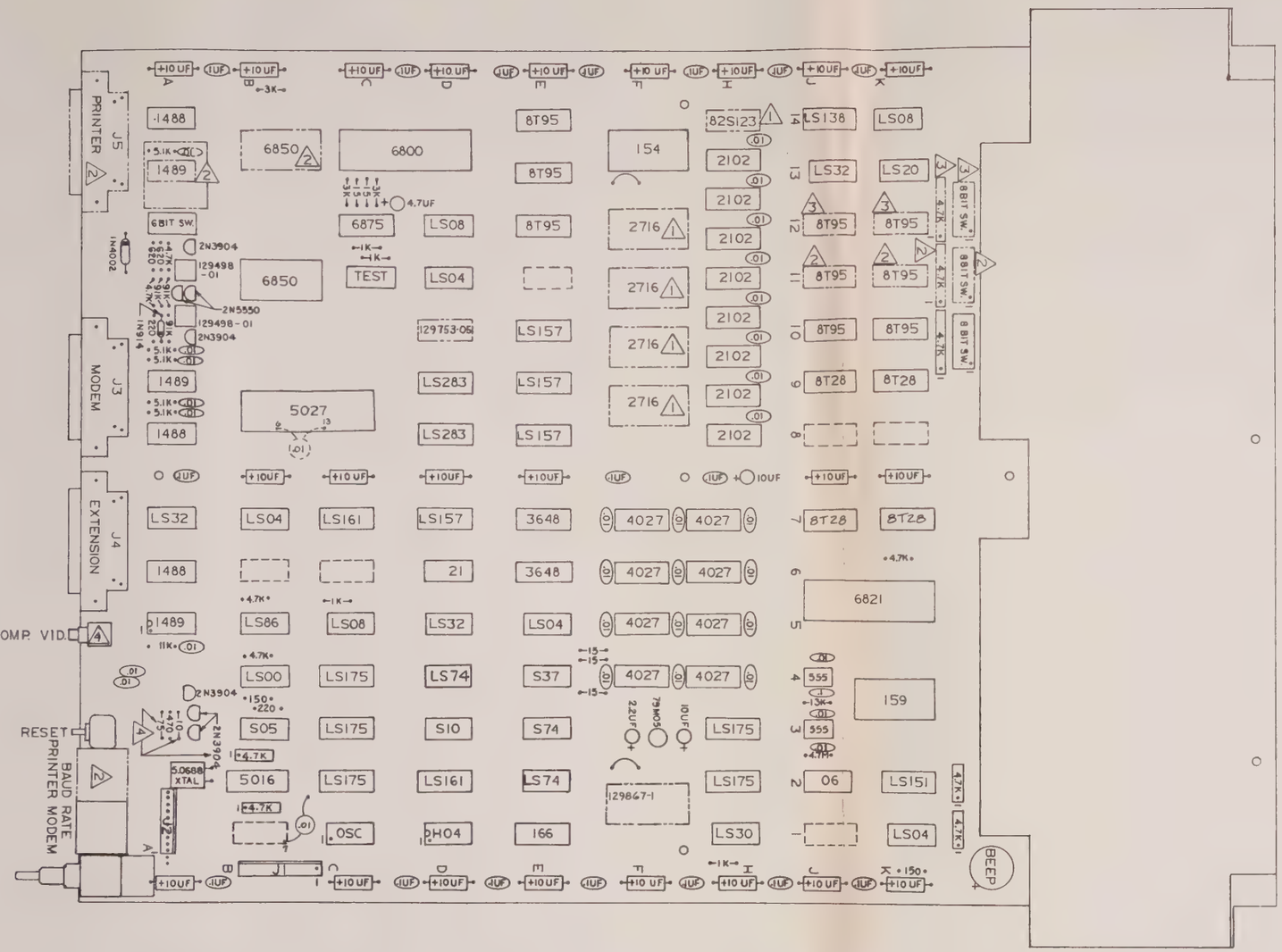

-1 ASSY SEE SHT 6 FOR MODIFICATION
(-5 P.C. BOARD)

ADD THE FOLLOWING JUMPERS

FROM	TO	FROM	TO
1.D-10	4B-1	4D-12	2E-9
11D-6	4B-2	4D-9	4B-13
4D-4	4B-3	4D-10	4D-13
4D-3	12D-8	4D-13	4D-14
4D-5	3B-13	4D-11	5D-10
4D-1	13C-40	2E-2	5D-1
4D-2	4D-7	2E-3	2D-2
3B-12	13C-2	2E-5	5D-2
12D-10	5C-13	5D-3	5C-1
12D-9	13C-7		

CUT ETCH FROM 2E-9, 2E-3 & 2E-5 TO FEED THRU ON CIRCUIT SIDE OF BOARD

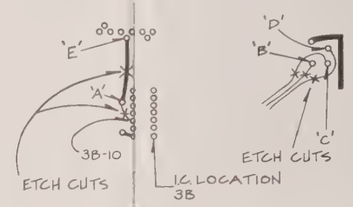

FIGURE #1

VIEW OF CIRCUIT SIDE OF BOARD, REAR RIGHT HAND CORNER.

SCALE = 1-1

CUT THE 5 ETCHES SHOWN ON FIGURE #1.

ADD THE FOLLOWING JUMPERS ON THE CIRCUIT SIDE OF THE BOARD.

FROM	TO
'D'	'C'
'C'	'E'
'C'	3B-10
'B'	'A'

NOTE: 'D' INDICATES POINT 'D' ON FIGURE #1

4 COMPOSITE VIDEO.
3 POLLING OPTION.
2 PRINTER OPTION.
1 FOR OPTION SEE DWG NO. 129541.

NOTES: UNLESS OTHERWISE SPECIFIED

DASH NO.	NEXT ASSY	USED ON
-1	129850	DL129850
	APPLICATION	

UNLESS OTHERWISE SPECIFIED
DIM. IN INCHES
TOLERANCES
.X ± .1
.XX ± .03
.XXX ± .010
ANGLES ± 0.5°
MACH. FIN.

CONTR NO.
DR J.C.S.
CHK
DSGN
ENGR
PROJ
REL
APPD
APPD

LEAR SIEGLER, INC.
ELECTRONIC INSTRUMENTATION DIVISION
ANAHEIM, CALIFORNIA 92803

P.C. BOARD ASSY.
ADM 31

SIZE	CODE IDENT NO.	DWG NO.	LTR
D	98438	129860	
SCALE FULL		-5	SHEET 4 OF

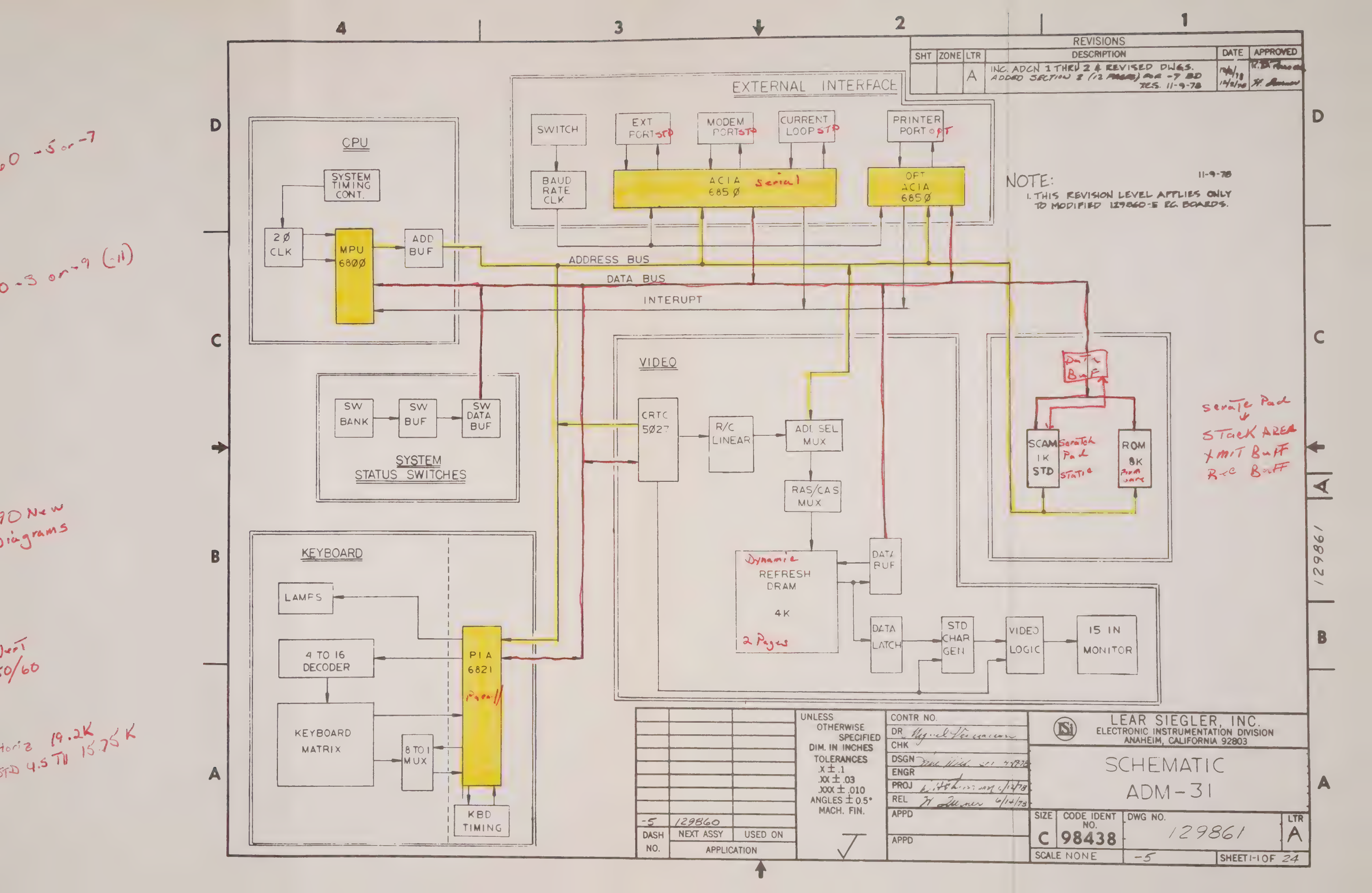

REVISIONS
SHT ZONE LTR DESCRIPTION DATE APPROVED
A INC. ADCN 1 THRU 2 & REVISED DWGS. ADDED SECTION 2 (12 PAGES) FOR -7 BD TCS. 11-9-78
EXTERNAL INTERFACE
SWITCH
EXT PORT STD
MODEM PORT STD
CURRENT LOOP STD
PRINTER PORT OPT
BAUD RATE CLK
ACIA 685Ø Serial
OPT ACIA 685Ø
CPU
SYSTEM TIMING CONT.
2Ø CLK
MPU 68ØØ
ADD BUF
ADDRESS BUS
DATA BUS
INTERUPT
NOTE: 11-9-78
1. THIS REVISION LEVEL APPLIES ONLY TO MODIFIED 129860-5 PC BOARDS.
SW BANK
SW BUF
SW DATA BUF
SYSTEM STATUS SWITCHES
VIDEO
CRTC 5Ø27
R/C LINEAR
ADD SEL MUX
RAS/CAS MUX
Dynamic REFRESH DRAM 4K 2 Pages
DATA BUF
DATA LATCH
STD CHAR GEN
VIDEO LOGIC
15 IN MONITOR
Data Buf
SCAM 1K STD
Scratch Pad Static
ROM 8K Firm ware
Scrate Pad
Stack AREA
Xmit Buff
Rec Buff
KEYBOARD
LAMPS
4 TO 16 DECODER
KEYBOARD MATRIX
8 TO 1 MUX
PIA 6821 Parall
KBD TIMING
-5 129860
DASH NO. NEXT ASSY USED ON
APPLICATION
UNLESS OTHERWISE SPECIFIED DIM. IN INCHES TOLERANCES .X ± .1 .XX ± .03 .XXX ± .010 ANGLES ± 0.5° MACH. FIN.
CONTR NO.
DR
CHK
DSGN
ENGR
PROJ
REL
APPD
APPD
LEAR SIEGLER, INC.
ELECTRONIC INSTRUMENTATION DIVISION
ANAHEIM, CALIFORNIA 92803
SCHEMATIC
ADM-31
SIZE C
CODE IDENT NO. 98438
DWG NO. 129861
LTR A
SCALE NONE
-5
SHEET 1-1 OF 24
129861

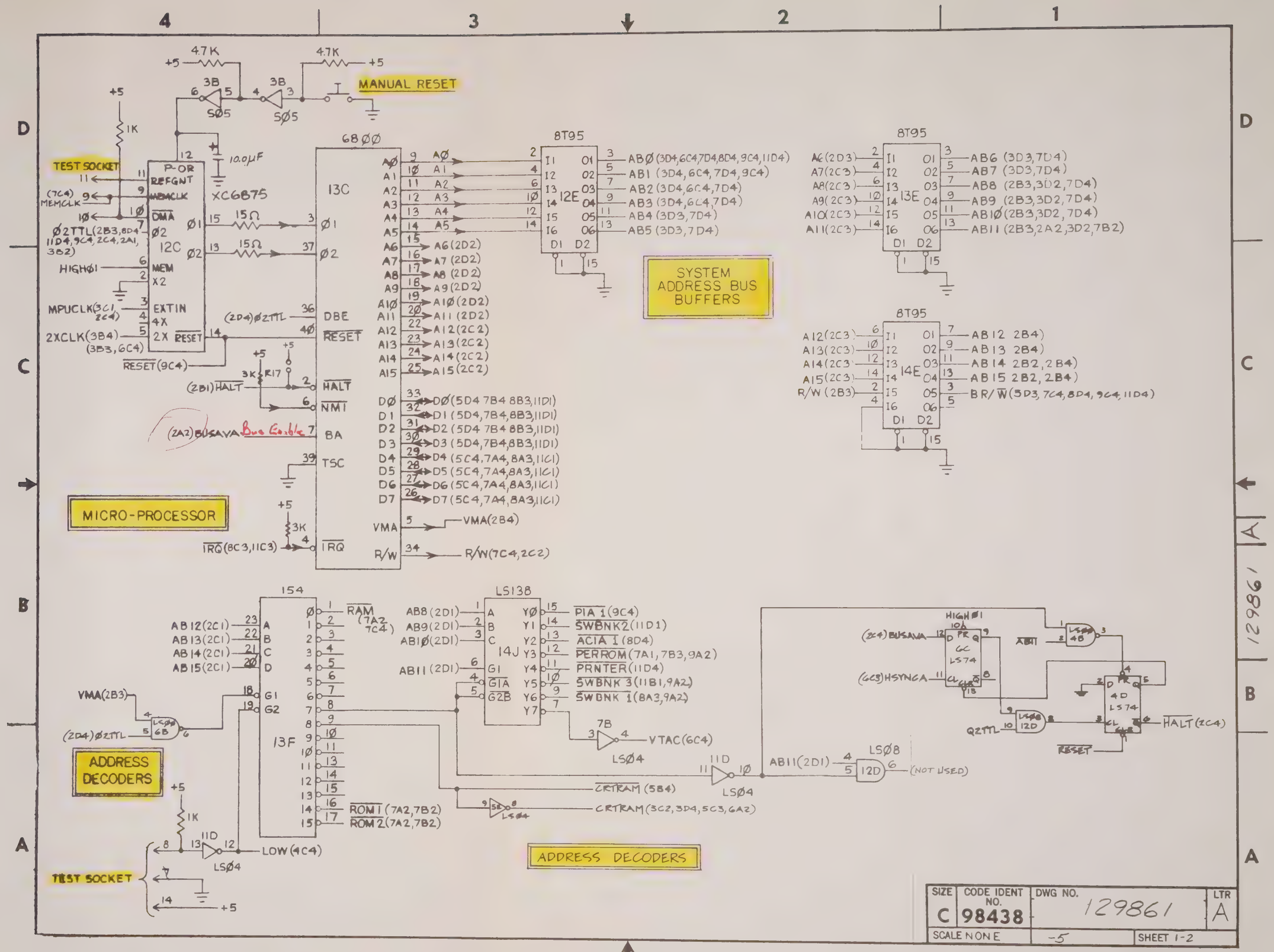
MANUAL RESET
TEST SOCKET
XC6875
68ØØ
13C
12C
8T95
12E
13E
14E
SYSTEM ADDRESS BUS BUFFERS
MICRO-PROCESSOR
154
13F
LS138
14J
ADDRESS DECODERS
ADDRESS DECODERS
TEST SOCKET
LSØ4
LSØ8
LS74
6C
4D
SIZE C
CODE IDENT NO. 98438
DWG NO. 129861
LTR A
SCALE NONE
-5
SHEET 1-2
129861 A

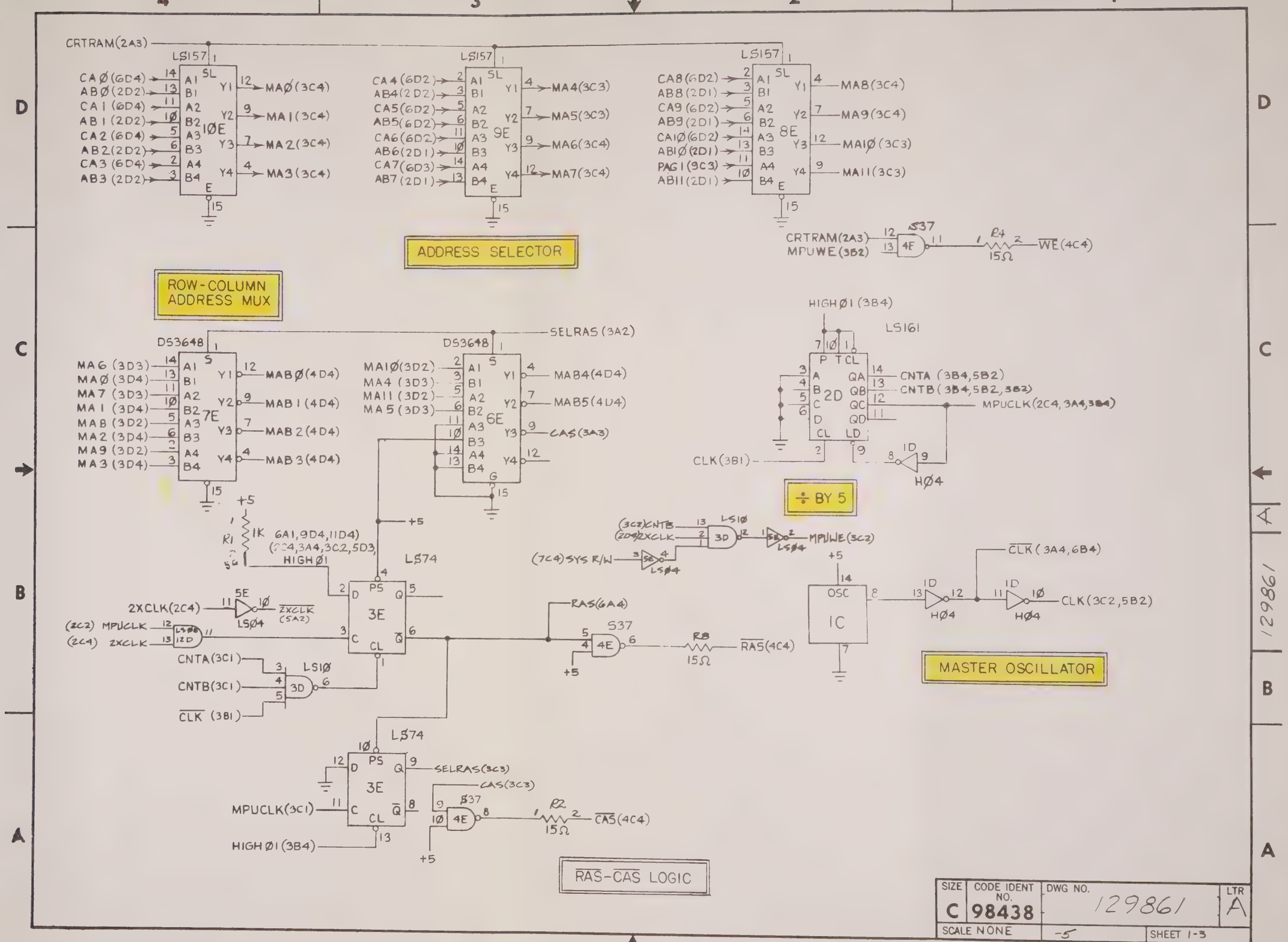
ADDRESS SELECTOR
ROW-COLUMN ADDRESS MUX
÷ BY 5
MASTER OSCILLATOR
RAS-CAS LOGIC
CRTRAM(2A3)
LS157
10E
9E
8E
CA0(6D4)
AB0(2D2)
CA1(6D4)
AB1(2D2)
CA2(6D4)
AB2(2D2)
CA3(6D4)
AB3(2D2)
MA0(3C4)
MA1(3C4)
MA2(3C4)
MA3(3C4)
CA4(6D2)
AB4(2D2)
CA5(6D2)
AB5(6D2)
CA6(6D2)
AB6(2D1)
CA7(6D3)
AB7(2D1)
MA4(3C3)
MA5(3C3)
MA6(3C4)
MA7(3C4)
CA8(6D2)
AB8(2D1)
CA9(6D2)
AB9(2D1)
CA10(6D2)
AB10(2D1)
PAG1(9C3)
AB11(2D1)
MA8(3C4)
MA9(3C4)
MA10(3C3)
MA11(3C3)
S37
4F
CRTRAM(2A3)
MPUWE(3B2)
R4
15Ω
WE(4C4)
DS3648
7E
6E
SELRAS(3A2)
MA6(3D3)
MA0(3D4)
MA7(3D3)
MA1(3D4)
MA8(3D2)
MA2(3D4)
MA9(3D2)
MA3(3D4)
MAB0(4D4)
MAB1(4D4)
MAB2(4D4)
MAB3(4D4)
MA10(3D2)
MA4(3D3)
MA11(3D2)
MA5(3D3)
MAB4(4D4)
MAB5(4D4)
CAS(3A3)
HIGH Ø1(3B4)
LS161
2D
CNTA(3B4,5B2)
CNTB(3B4,5B2,3B2)
MPUCLK(2C4,3A4,3B4)
CLK(3B1)
1D
HØ4
+5
R1
1K
6A1,9D4,11D4)
(2C4,3A4,3C2,5D3)
HIGH Ø1
LS74
3E
2XCLK(2C4)
5E
LS04
ZXCLK
(5A2)
(2C2) MPUCLK
(2C4) 2XCLK
LS08
2D
CNTA(3C1)
CNTB(3C1)
CLK (3B1)
LS10
3D
(3C2)CNTB
(2D4)2XCLK
(7C4)SYS R/W
MPUWE(3C2)
RAS(6A4)
S37
4E
R3
15Ω
RAS(4C4)
OSC
1C
CLK(3A4,6B4)
CLK(3C2,5B2)
SELRAS(3C3)
CAS(3C3)
MPUCLK(3C1)
HIGH Ø1(3B4)
R2
CAS(4C4)
SIZE
C
CODE IDENT NO.
98438
DWG NO.
129861
LTR
A
SCALE NONE
-5
SHEET 1-3

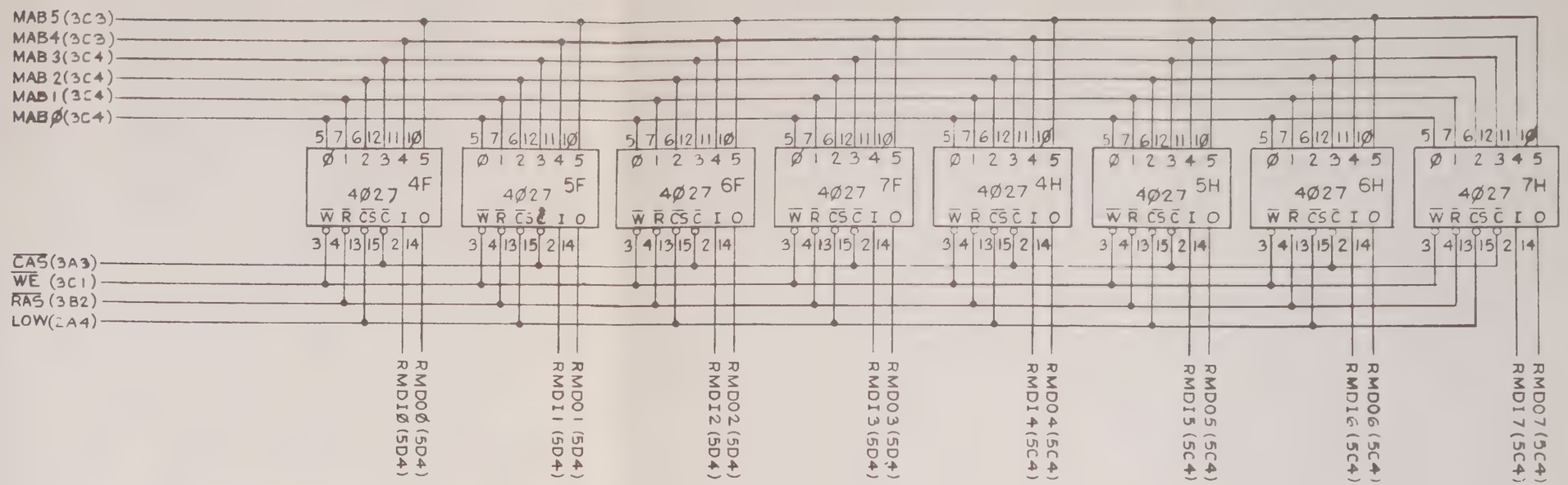

REFRESH MEMORY

SIZE	CODE IDENT NO.	DWG NO.	LTR
C	98438	129861	A
SCALE NONE		-5	SHEET 1-4

129861

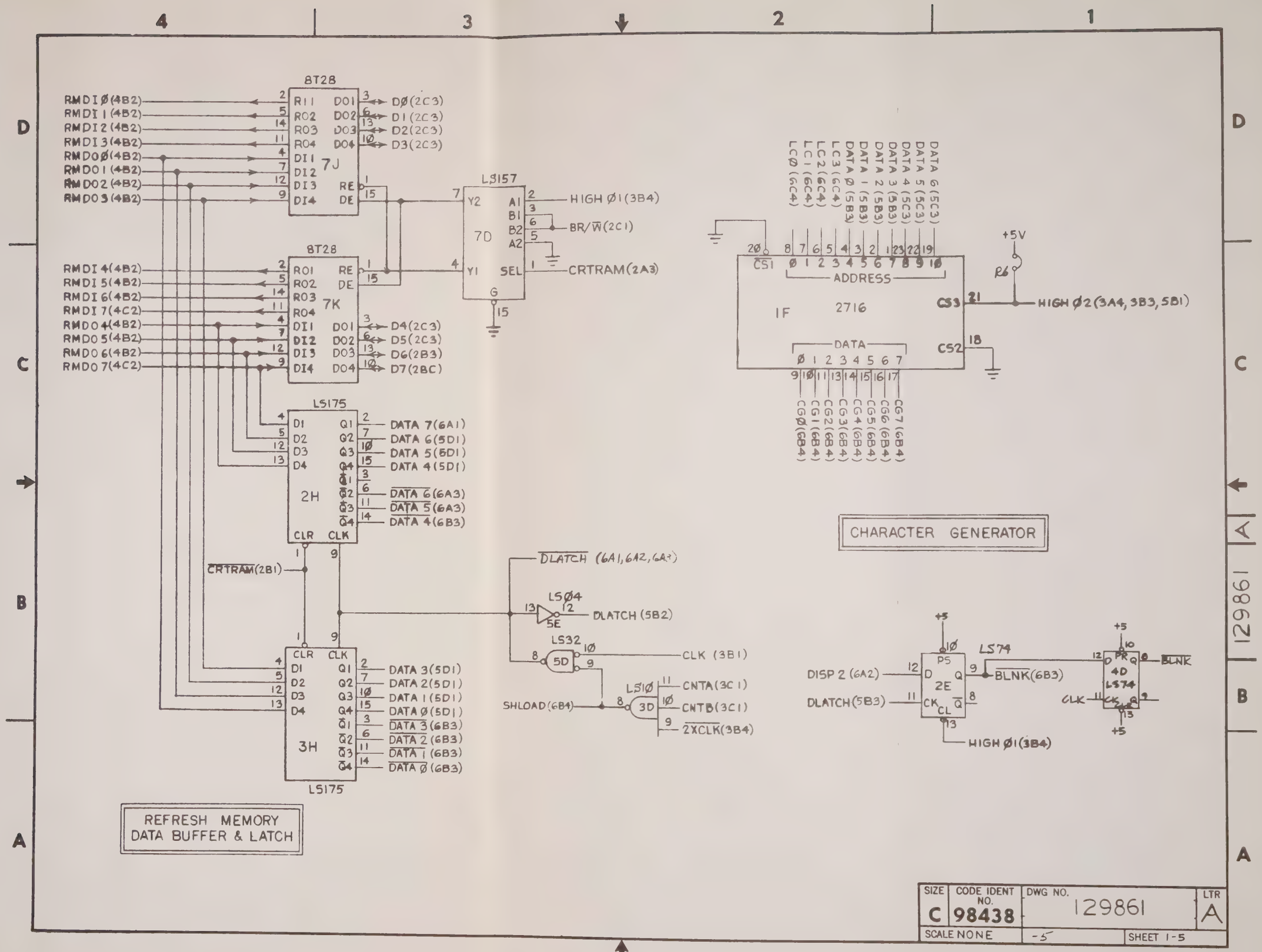
8T28
7J
8T28
7K
LS157
7D
LS175
2H
LS175
3H
LS04
5E
LS32
5D
LS10
3D
RMDI Ø(4B2)
RMDI 1(4B2)
RMDI 2(4B2)
RMDI 3(4B2)
RMDO Ø(4B2)
RMDO 1(4B2)
RMDO 2(4B2)
RMDO 3(4B2)
RMDI 4(4B2)
RMDI 5(4B2)
RMDI 6(4B2)
RMDI 7(4C2)
RMDO 4(4B2)
RMDO 5(4B2)
RMDO 6(4B2)
RMDO 7(4C2)
DØ(2C3)
D1(2C3)
D2(2C3)
D3(2C3)
D4(2C3)
D5(2C3)
D6(2B3)
D7(2BC)
HIGH Ø1(3B4)
BR/W(2C1)
CRTRAM(2A3)
DATA 7(6A1)
DATA 6(5D1)
DATA 5(5D1)
DATA 4(5D1)
DATA 6(6A3)
DATA 5(6A3)
DATA 4(6B3)
CRTRAM(2B1)
DLATCH (6A1,6A2,6A3)
DLATCH (5B2)
CLK (3B1)
SHLOAD(6B4)
CNTA(3C1)
CNTB(3C1)
2XCLK(3B4)
DATA 3(5D1)
DATA 2(5D1)
DATA 1(5D1)
DATA Ø(5D1)
DATA 3(6B3)
DATA 2(6B3)
DATA 1(6B3)
DATA Ø(6B3)
REFRESH MEMORY
DATA BUFFER & LATCH
LCØ(6C4)
LC1(6C4)
LC2(6C4)
LC3(6C4)
DATA Ø(5B3)
DATA 1(5B3)
DATA 2(5B3)
DATA 3(5B3)
DATA 4(5C3)
DATA 5(5C3)
DATA 6(5C3)
CS1
ADDRESS
1F
2716
DATA
CS3
CS2
+5V
R6
HIGH Ø2(3A4,3B3,5B1)
CGØ(6B4)
CG1(6B4)
CG2(6B4)
CG3(6B4)
CG4(6B4)
CG5(6B4)
CG6(6B4)
CG7(6B4)
CHARACTER GENERATOR
DISP 2 (6A2)
DLATCH(5B3)
2E
LS74
BLNK(6B3)
HIGH Ø1(3B4)
4D
LS74
CLK
BLNK
SIZE
C
CODE IDENT NO.
98438
DWG NO.
129861
LTR
A
SCALE NONE
-5
SHEET 1-5
129861

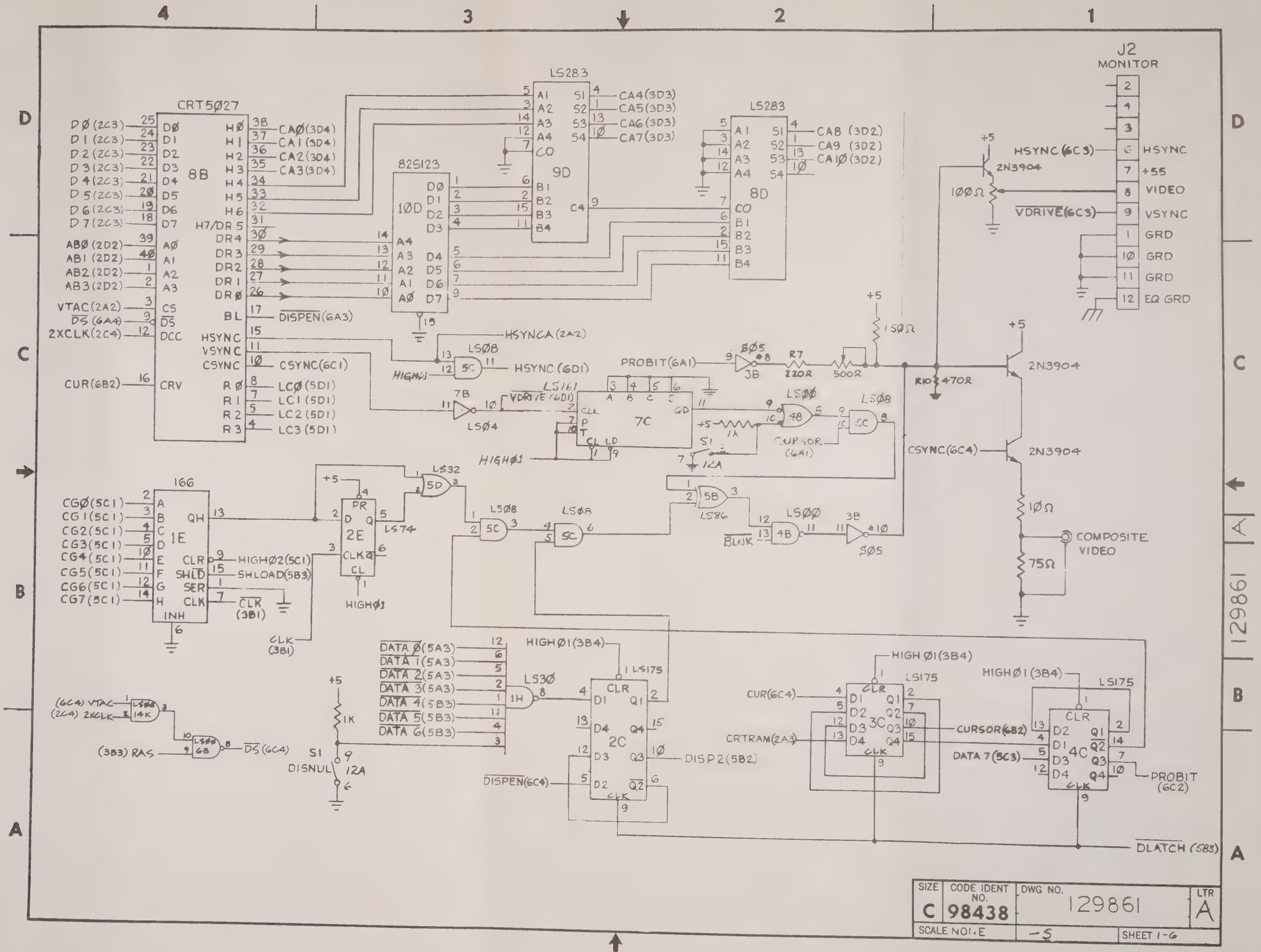

J2
MONITOR
HSYNC
+55
VIDEO
VSYNC
GRD
GRD
GRD
EQ GRD
HSYNC (6C3)
VDRIVE (6C3)
CRT5Ø27
8B
LS283
9D
8D
82S123
1ØD
LSØ8
LS161
7C
LSØØ
LS32
LS74
2E
166
1E
LS86
LS175
2C
3C
4C
LS3Ø
2N3904
COMPOSITE VIDEO
CSYNC (6C4)
PROBIT (6A1)
CURSOR (6A1)
HIGHØ1
HIGHØ2 (5C1)
SHLOAD (5B3)
DISPEN (6A3)
HSYNCA (2A2)
CSYNC (6C1)
CUR (6B2)
DISP2 (5B2)
DLATCH (5B3)
PROBIT (6C2)
CURSOR (6B2)
DATA 7 (5C3)
CRTRAM (2A3)
(3B3) RAS
DISNUL
SIZE C
CODE IDENT NO. 98438
DWG NO. 129861
LTR A
SCALE NONE
SHEET 1-6
129861

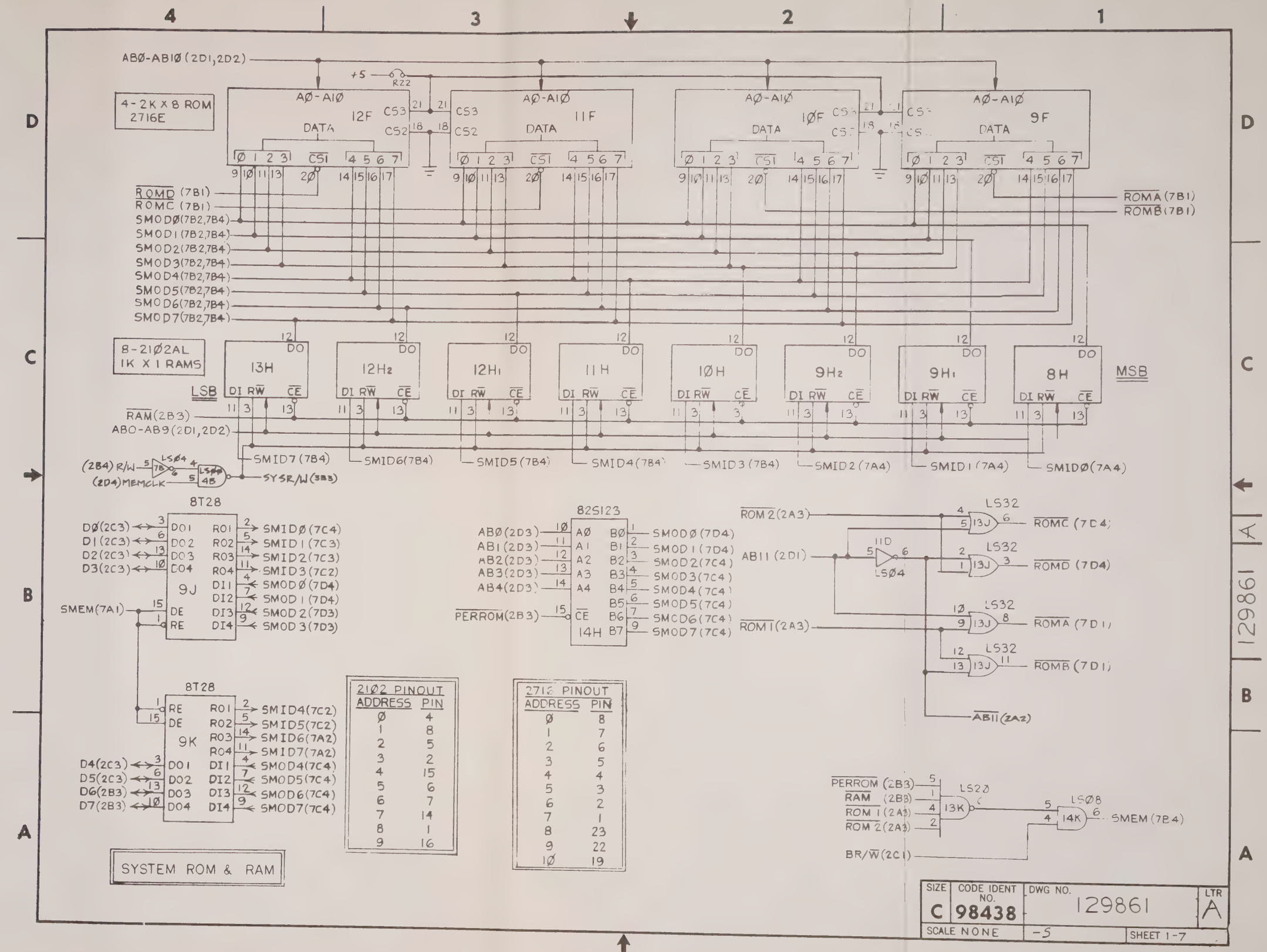

2102 PINOUT	
ADDRESS	PIN
Ø	4
1	8
2	5
3	2
4	15
5	6
6	7
7	14
8	1
9	16

2716 PINOUT	
ADDRESS	PIN
Ø	8
1	7
2	6
3	5
4	4
5	3
6	2
7	1
8	23
9	22
1Ø	19

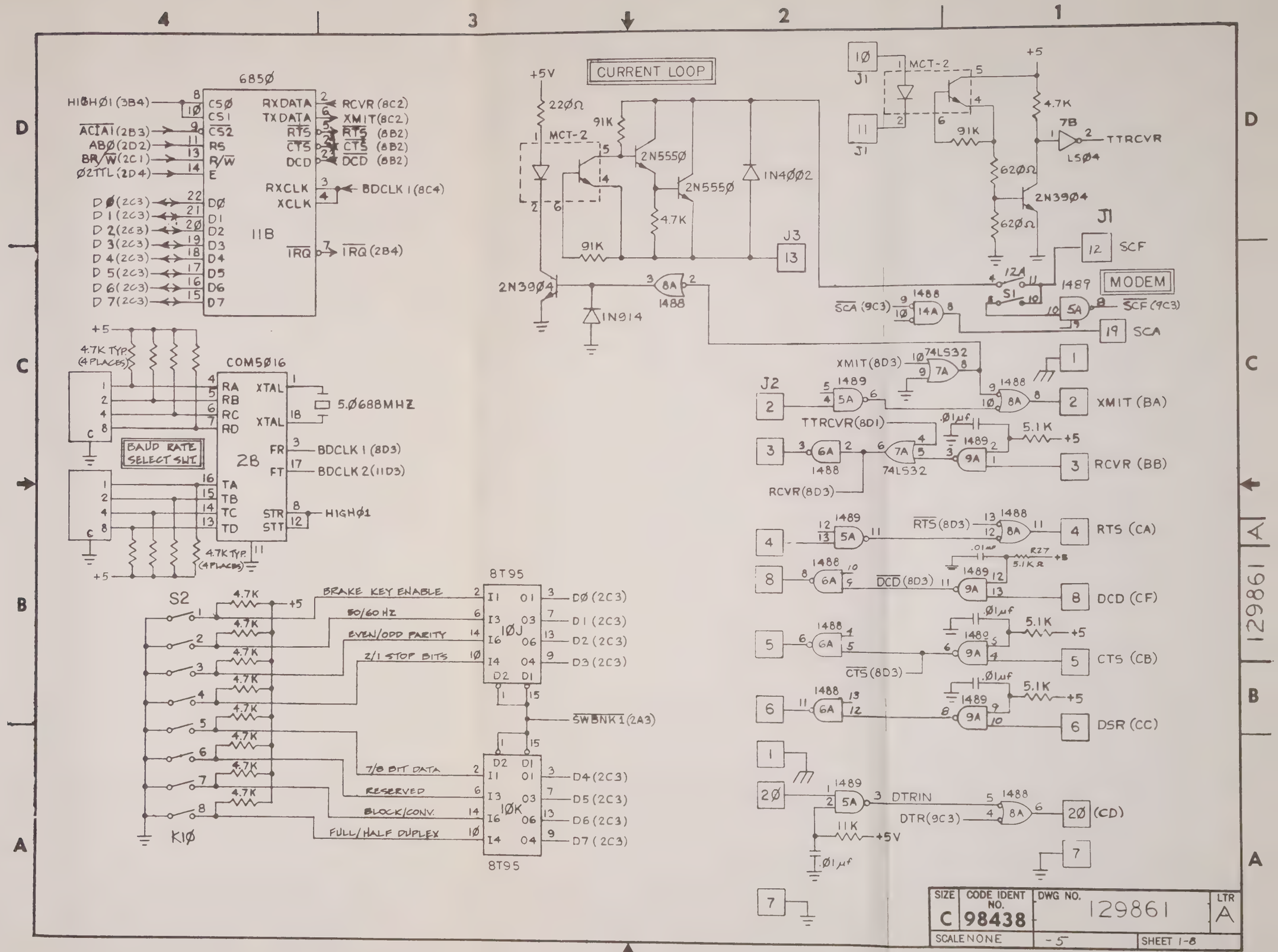

CURRENT LOOP
MODEM
685Ø
11B
COM5Ø16
2B
BAUD RATE SELECT SWT
5.Ø688MHZ
HIGHØ1 (3B4)
ACIA1 (2B3)
ABØ (2D2)
BR/W (2C1)
Ø2TTL (2D4)
RCVR (8C2)
XMIT (8C2)
RTS (8B2)
CTS (8B2)
DCD (8B2)
BDCLK 1 (8C4)
IRQ (2B4)
BDCLK 1 (8D3)
BDCLK 2 (11D3)
HIGHØ1
4.7K TYP. (4 PLACES)
S2
K1Ø
8T95
1ØJ
1ØK
BRAKE KEY ENABLE
50/60 HZ
EVEN/ODD PARITY
2/1 STOP BITS
7/8 BIT DATA
RESERVED
BLOCK/CONV.
FULL/HALF DUPLEX
SWBNK1 (2A3)
D4 (2C3)
D5 (2C3)
D6 (2C3)
D7 (2C3)
+5V
22ØΩ
91K
2N555Ø
4.7K
1N4ØØ2
2N39Ø4
1N914
J3
J1
J2
J3
MCT-2
7B
LSØ4
TTRCVR
62ØΩ
SCF
SCA
SCA (9C3)
SCF (9C3)
XMIT (8D3)
74LS32
XMIT (BA)
TTRCVR (8D1)
RCVR (8D3)
RCVR (BB)
RTS (8D3)
RTS (CA)
DCD (8D3)
DCD (CF)
CTS (8D3)
CTS (CB)
DSR (CC)
DTRIN
DTR (9C3)
(CD)
11K
.Ø1μf
5.1K
SIZE C
CODE IDENT NO. 98438
DWG NO. 129861
LTR A
SCALE NONE
-5
SHEET 1-8
129861 A

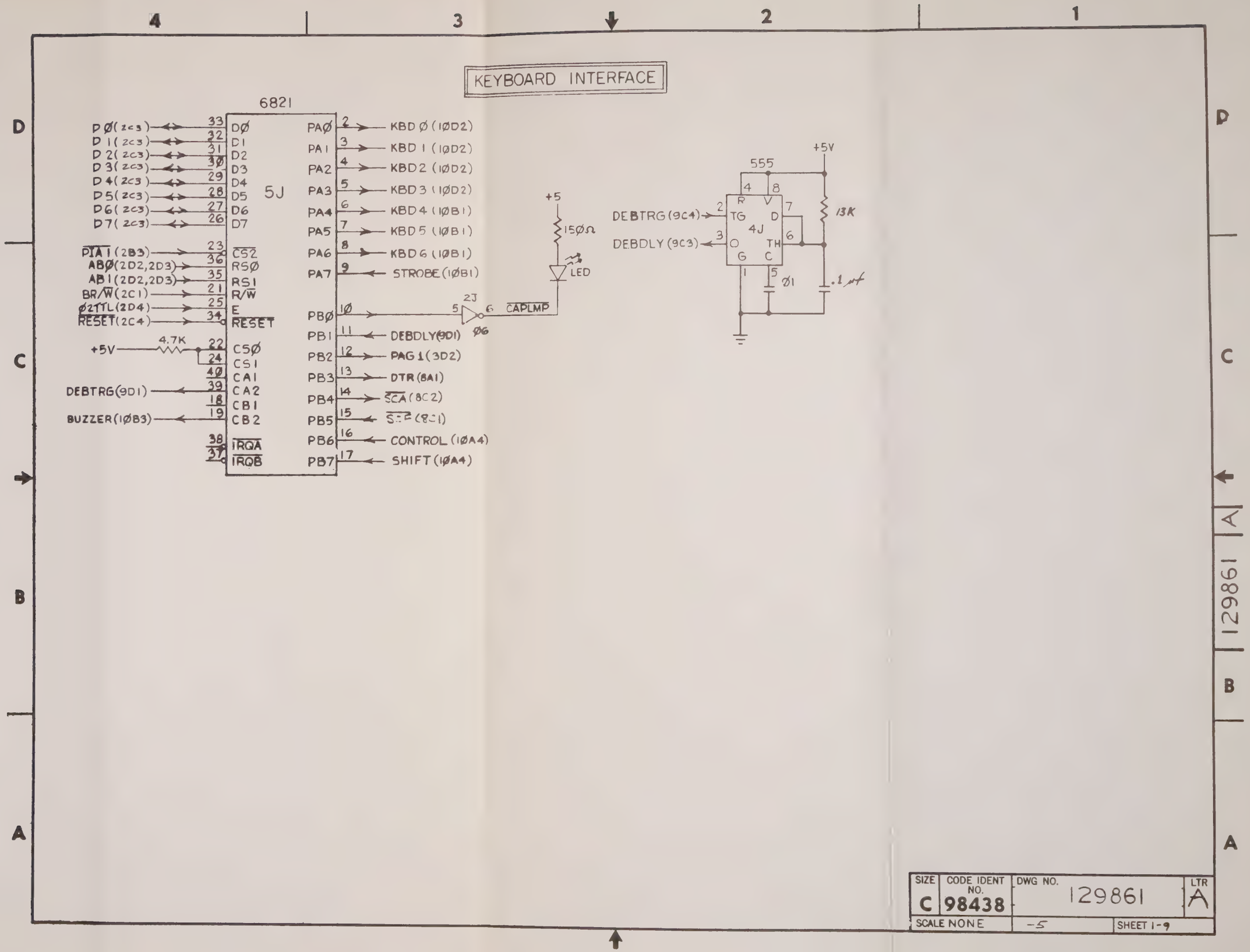

SIZE	CODE IDENT NO.	DWG NO.	LTR
C	98438	129861	A
SCALE NONE		-5	SHEET 1-9

129861

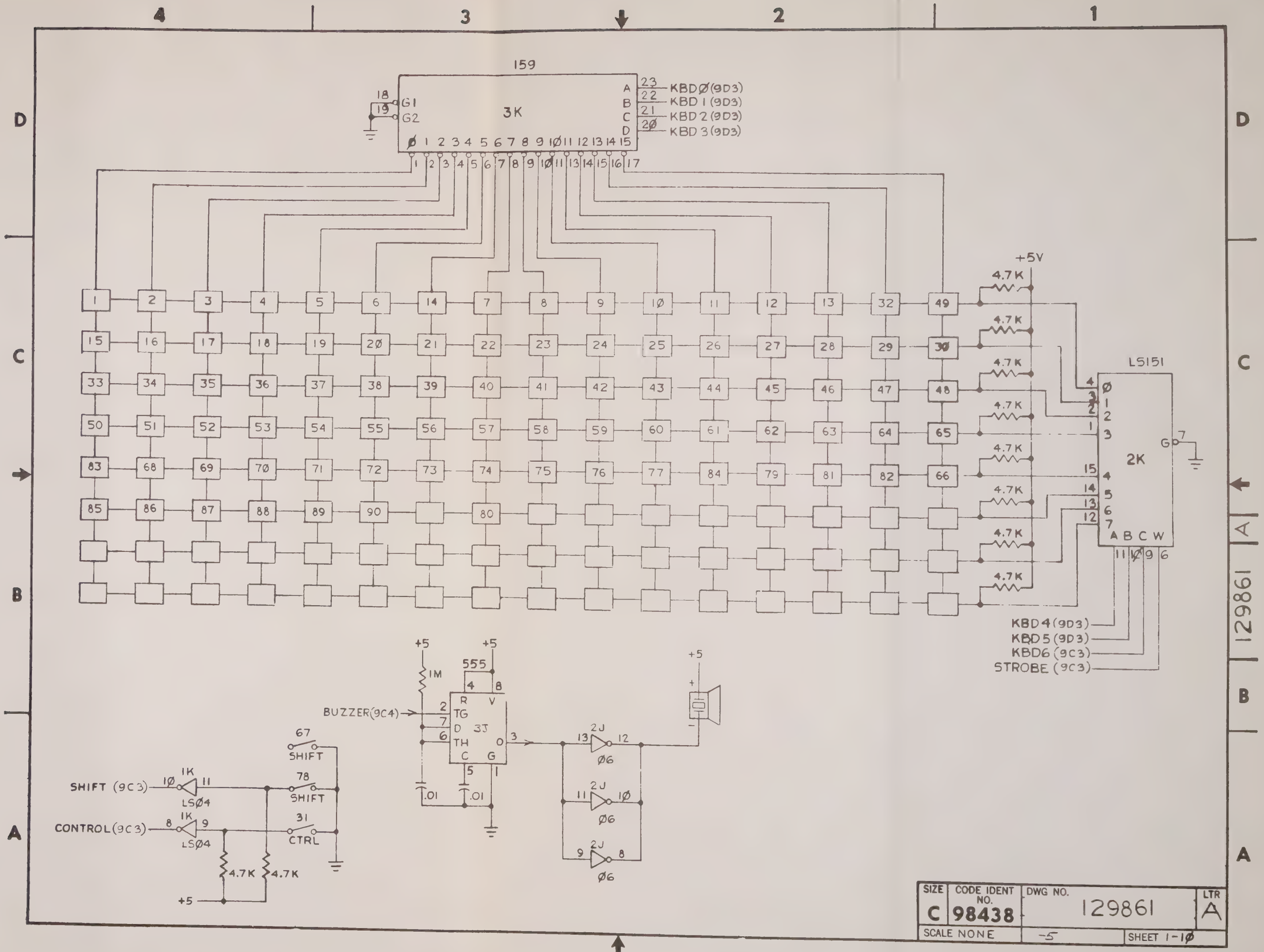

SIZE	CODE IDENT NO.	DWG NO.	LTR
C	98438	129861	A
SCALE NONE		-5	SHEET 1-10

129861

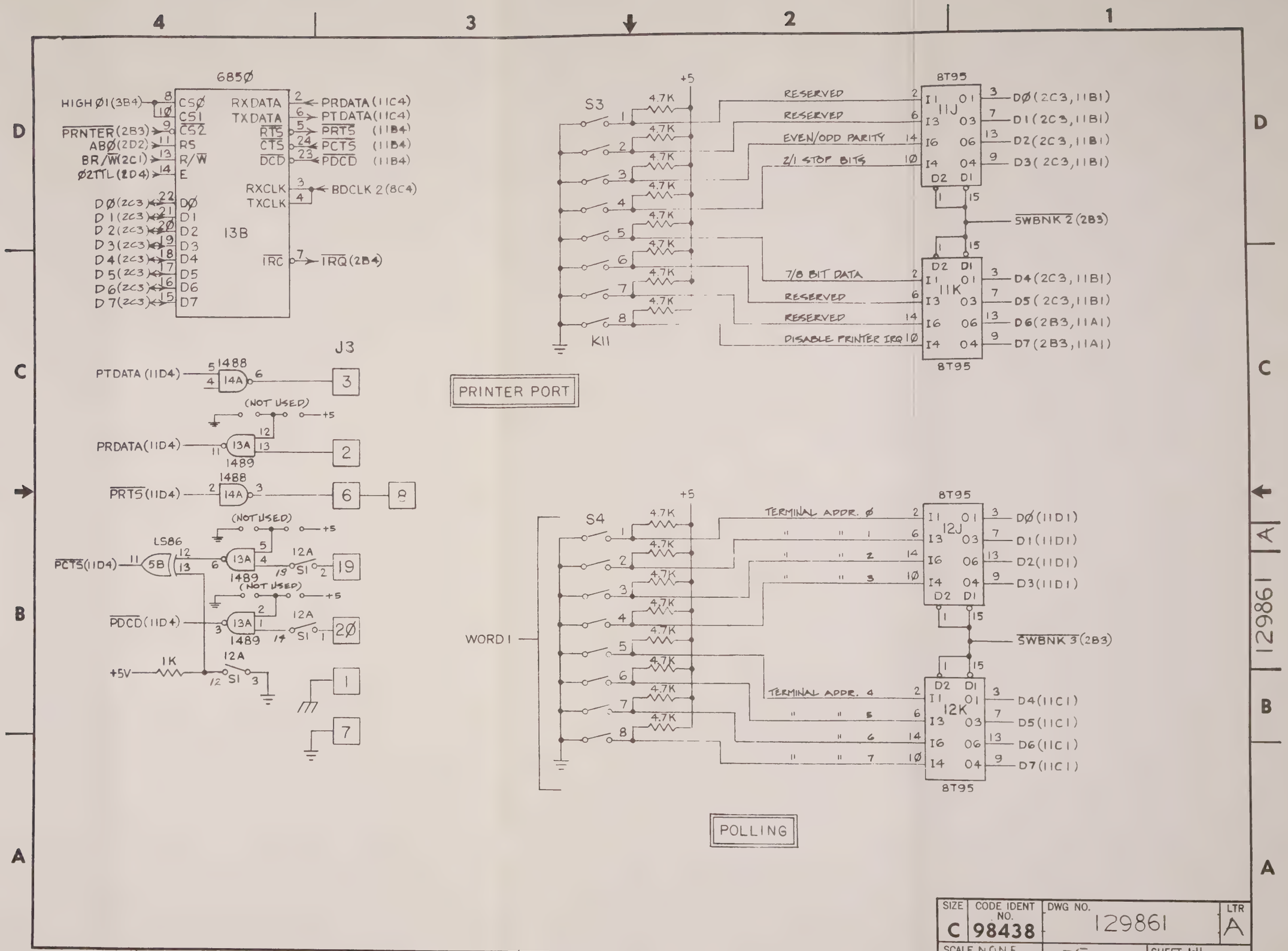

SIZE	CODE IDENT NO.	DWG NO.	LTR
C	98438	129861	A
SCALE NONE		-5	SHEET 1-11

CONNECTOR PIN ASSIGNMENTS

J1

PIN NO.	FUNCTION	SHEET
1		
2		
3		
4		
5		
6		
7		
8		
9		

J2

PIN NO.	FUNCTION	SHEET
1	GND	
2		
3		
4		
5		
6	HSYNC	6D1
7	+55	6D1
8	VIDEO	6D1
9	VSYNC	6D1
10	GND	
11	GND	
12	EQ GND	

J3

PIN NO.	FUNCTION	SHEET
1	FRAME GND	
2	XMIT	8C1
3	RCVR	8C1
4	RTS	8B1
5	CTS	8B1
6	DSR	8B1
7	GND	
8	DCD	8B1
9		
10		
11		
12	YY	8C1
13		
14		
15		
16		
17		
18		
19	XX	8A1
20	DTR	8A1
21		
22		
23		
24		
25		

J4

PIN NO.	FUNCTION	SHEET
1	FRAME GND	
2	XMIT	8C2
3	RCVR	8C2
4	RTS	8B2
5	CTS	8B2
6	DSR	8B2
7	GND	
8	DCD	8B2
9		
10		
11		
12		
13		
14		
15		
16		
17		
18		
19		
20	DTR	8A2
21		
22		
23		
24		
25		

J5

PIN NO.	FUNCTION	SHEET
1	FRAME GND	
2	PRDATA	11C3
3	PTDATA	11C3
4		
5		
6	$\overline{\text{PRTS}}$	11B3
7	GND	
8	$\overline{\text{PRTS}}$	11B3
9		
10		
11		
12		
13		
14		
15		
16		
17		
18		
19	$\overline{\text{PCTS}}$	11B3
20	$\overline{\text{PDCD}}$	11B3
21		
22		
23		
24		
25		

SWITCH ASSIGNMENTS

SWITCH	SECT	FUNCTION	SHEET
S1	1		
	2		
	3		
	4		
	5		
	6	DISNUL	
S2	1		
	2		
	3		
	4		
	5		
	6		
	7		
	8		
S3	1		
	2		
	3		
	4		
	5		
	6		
	7		
	8		
S4	1		
	2		
	3		
	4		
	5		
	6		
	7		
	8		

129861

SIZE	CODE IDENT NO.	DWG NO.	LTR
C	98438	129861	A
SCALE NONE		-5	SHEET 1-12

REVISIONS					
SHT	ZONE	LTR	DESCRIPTION	DATE	APPROVED
		A	INCORPORATED ADCN 1-8 ADDED SH.3 & 4 CREATED -11 & -7 TES 9-8-78	[illegible]	[illegible]
		B	INC. ADCN 9-12 & ADDED 2 SHEETS TES 12-13-78	[illegible]	[illegible]
		C	INC. ADCN. 13-17	2/10/79	[illegible]

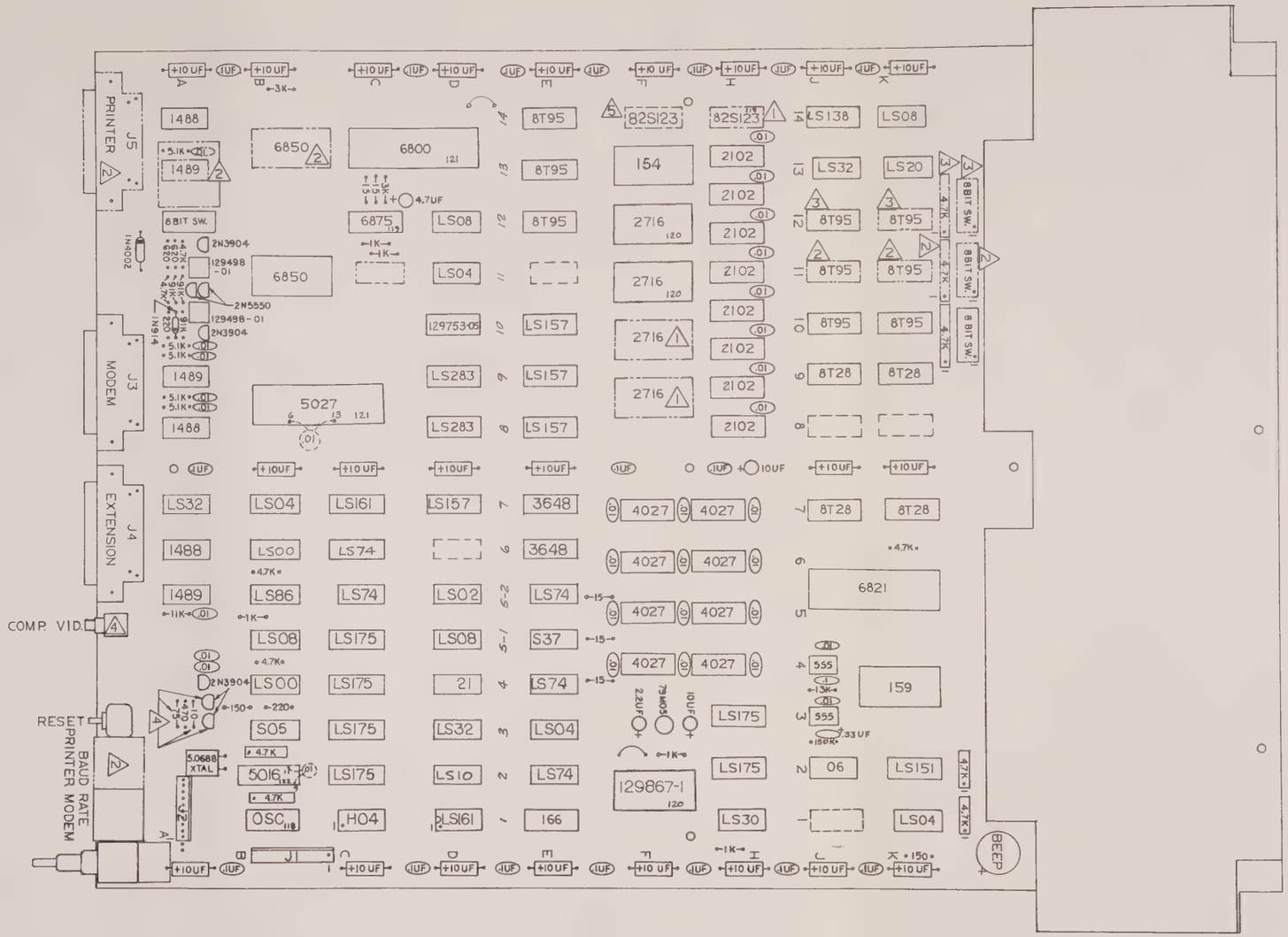

-11 ASSY SEE SHT 3 FOR MODIFICATIONS
(-7 P.C. BOARD)

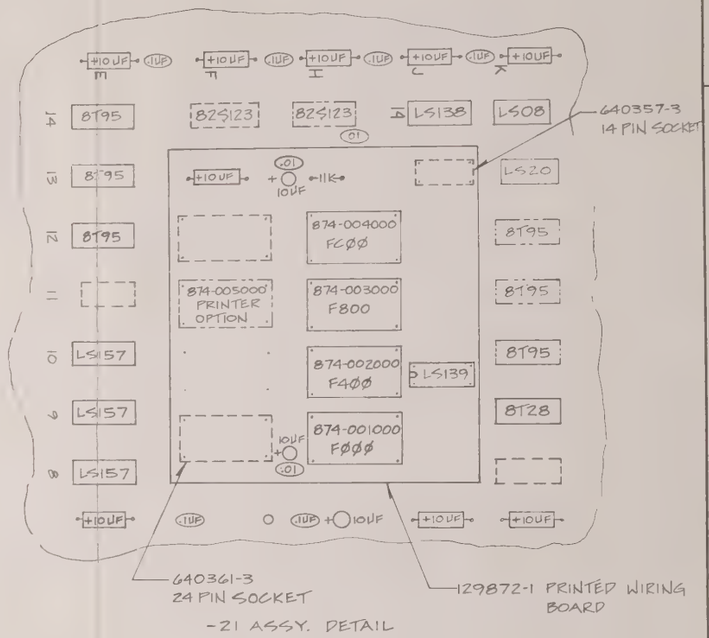

-21 ASSY. DETAIL

5 ANSWER BACK
4 COMPOSITE VIDEO.
3 POLLING OPTION.
2 PRINTER OPTION.
1 FOR OPTION SEE DWG NO. 129541.
NOTES: UNLESS OTHERWISE SPECIFIED

DASH NO.	NEXT ASSY	USED ON
-11	129850	
-1	129850	DL129850
	APPLICATION	

UNLESS OTHERWISE SPECIFIED
DIM. IN INCHES
TOLERANCES
.X ± .1
.XX ± .03
.XXX ± .010
ANGLES ± 0.5°
MACH. FIN.

CONTR NO.
DR Miguel Veneracion 5-31-78
CHK
DSGN
ENGR
PROJ [illegible] 6-14-78
REL W. Turner 6-14-78
APPD
APPD

LEAR SIEGLER, INC.
ELECTRONIC INSTRUMENTATION DIVISION
ANAHEIM, CALIFORNIA 92803

P.C. BOARD ASSY.
ADM 31

SIZE	CODE IDENT NO.	DWG NO.	LTR
D	98438	129860	C
SCALE FULL		-7	SHEET 1 OF 6

129860

1540

14

2000
14
8000
20000
28000

REVISIONS					
SHT	ZONE	LTR	DESCRIPTION	DATE	APPROVED

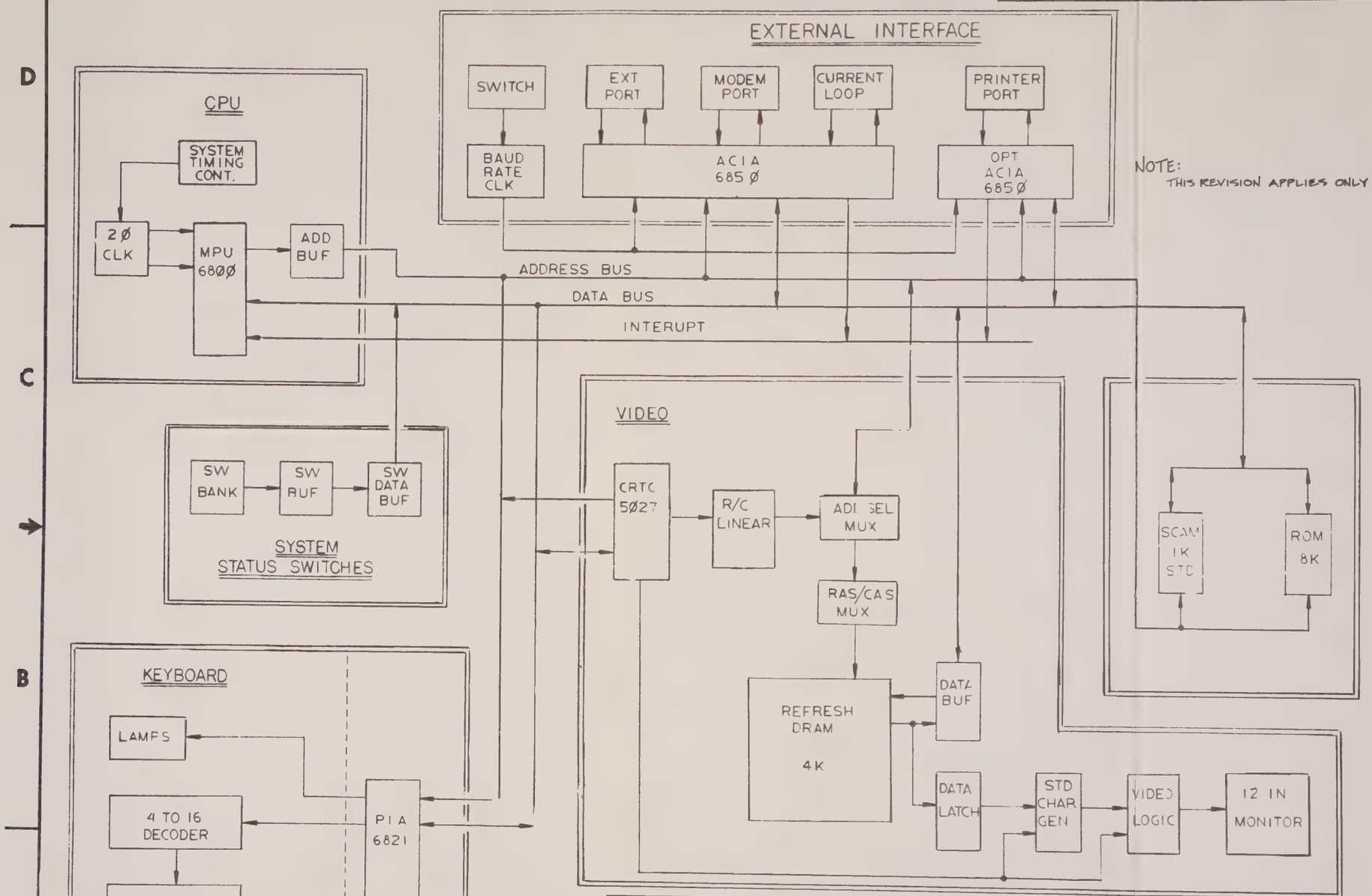

NOTE:
THIS REVISION APPLIES ONLY TO 129860-7 P.C. BOARDS.

DASH NO.	NEXT ASSY	USED ON
-5	129860	
	APPLICATION	

UNLESS OTHERWISE SPECIFIED
DIM. IN INCHES
TOLERANCES
.X ± .1
.XX ± .03
.XXX ± .010
ANGLES ± 0.5°
MACH. FIN.

CONTR NO.
DR
CHK
DSGN
ENGR
PROJ
REL
APPD
APPD

LEAR SIEGLER, INC.
ELECTRONIC INSTRUMENTATION DIVISION
ANAHEIM, CALIFORNIA 92803

SCHEMATIC
ADM-31

SIZE	CODE IDENT NO.	DWG NO.	LTR
C	98438	129861	A
SCALE NONE		-7	SHEET 2-1

129861

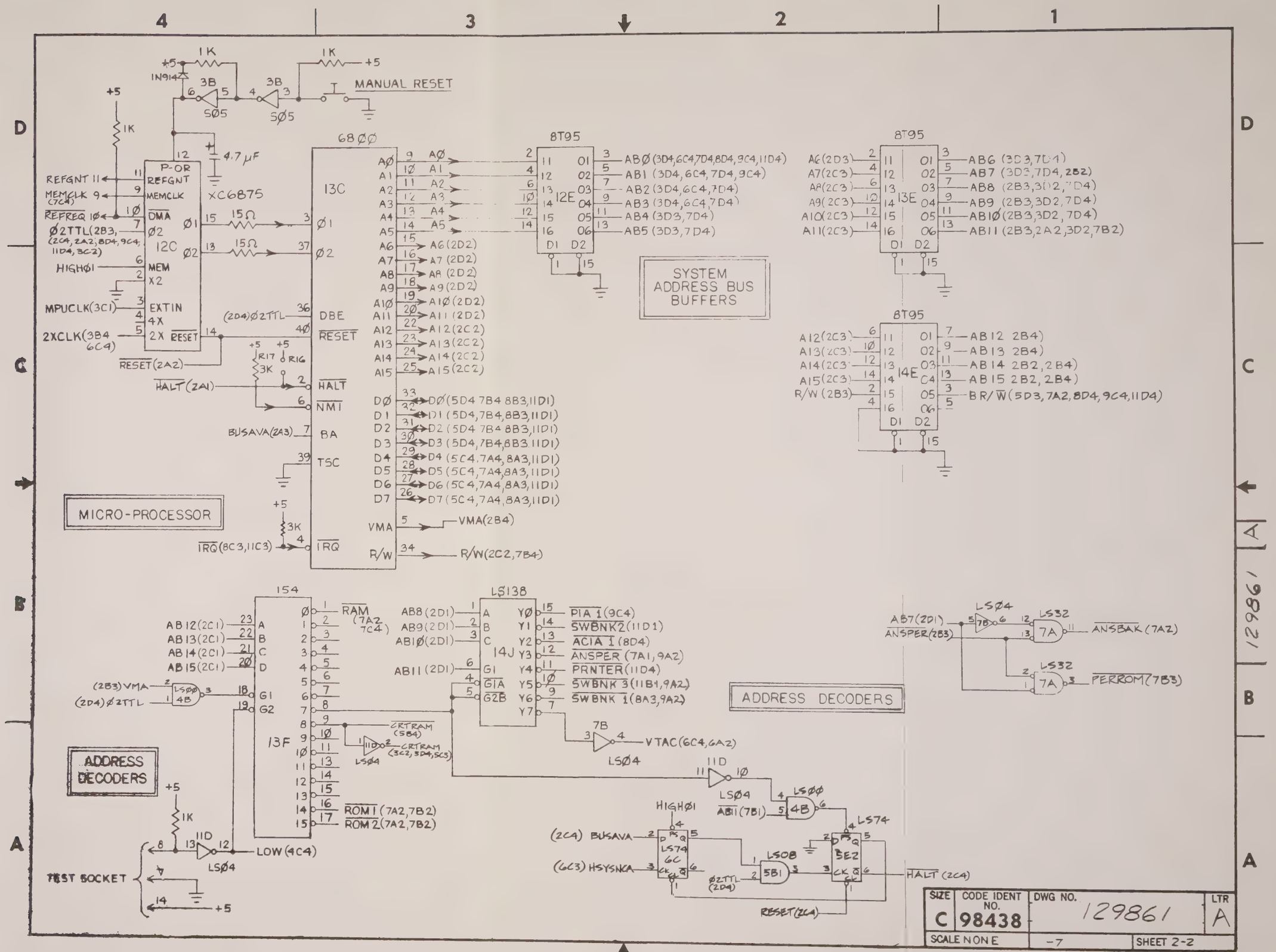
MANUAL RESET
MICRO-PROCESSOR
SYSTEM ADDRESS BUS BUFFERS
ADDRESS DECODERS
ADDRESS DECODERS
TEST SOCKET
XC6875
68ØØ
8T95
154
LS138
SIZE C
CODE IDENT NO. 98438
DWG NO. 129861
LTR A
SCALE NONE
-7
SHEET 2-2

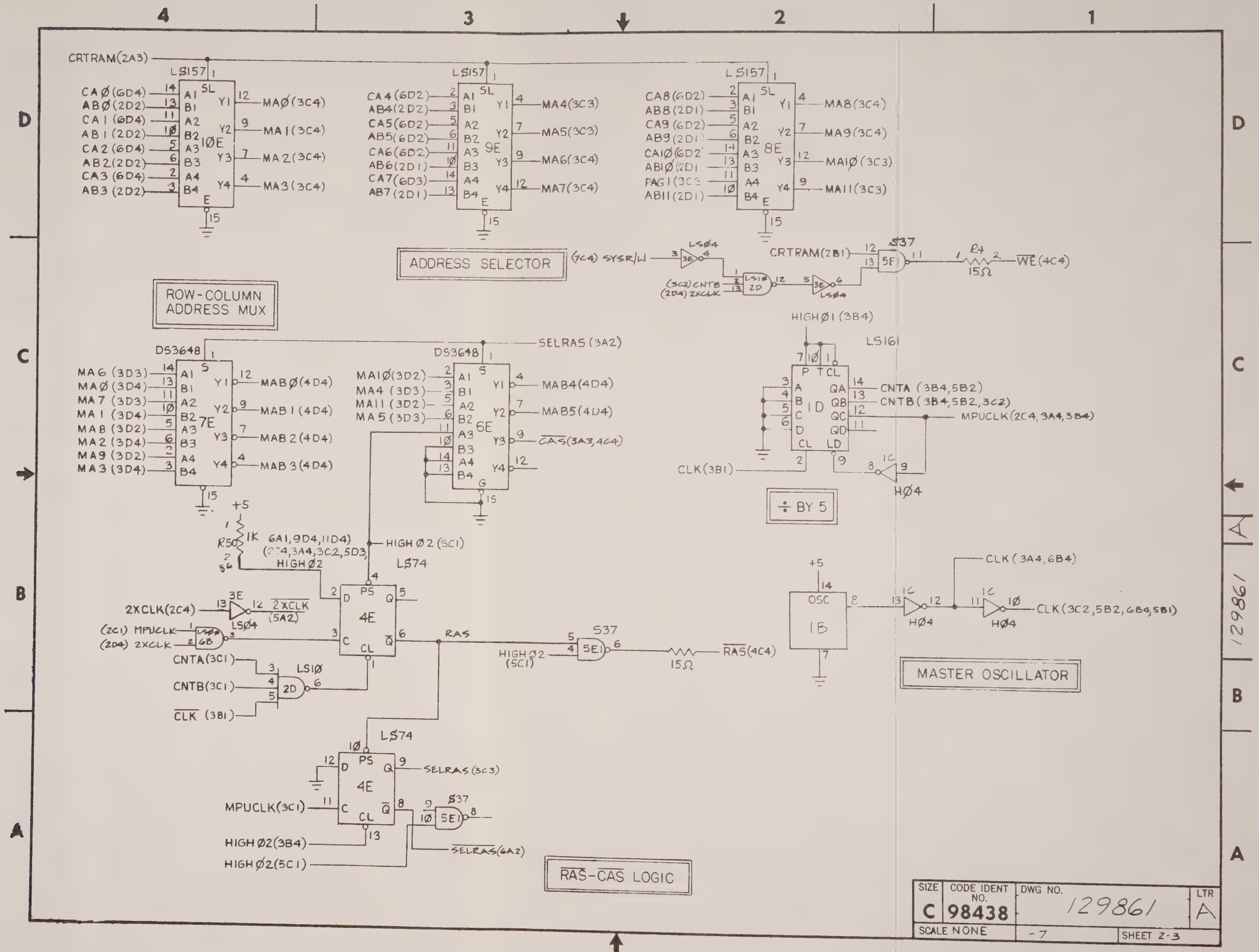
CRTRAM(2A3)
LS157
10E
CAØ(6D4)
ABØ(2D2)
CA1(6D4)
AB1(2D2)
CA2(6D4)
AB2(2D2)
CA3(6D4)
AB3(2D2)
MAØ(3C4)
MA1(3C4)
MA2(3C4)
MA3(3C4)
9E
CA4(6D2)
AB4(2D2)
CA5(6D2)
AB5(6D2)
CA6(6D2)
AB6(2D1)
CA7(6D3)
AB7(2D1)
MA4(3C3)
MA5(3C3)
MA6(3C4)
MA7(3C4)
8E
CA8(6D2)
AB8(2D1)
CA9(6D2)
AB9(2D1)
CA10(6D2)
AB10(2D1)
PAG1(3C3)
AB11(2D1)
MA8(3C4)
MA9(3C4)
MA10(3C3)
MA11(3C3)
ADDRESS SELECTOR
(7C4) SYSR/W
LS04
(3C2) CNTB
(2D4) 2XCLK
LS10 2D
S37
5F1
CRTRAM(2B1)
R4
15Ω
WE(4C4)
ROW-COLUMN ADDRESS MUX
DS3648
7E
MA6(3D3)
MAØ(3D4)
MA7(3D3)
MA1(3D4)
MAB(3D2)
MA2(3D4)
MA9(3D2)
MA3(3D4)
MABØ(4D4)
MAB1(4D4)
MAB2(4D4)
MAB3(4D4)
SELRAS(3A2)
6E
MA10(3D2)
MA4(3D3)
MA11(3D2)
MA5(3D3)
MAB4(4D4)
MAB5(4D4)
CAS(3A3,4C4)
+5
R50
1K
6A1,9D4,11D4)
(2C4,3A4,3C2,5D3,
HIGHØ2
HIGHØ2(5C1)
LS74
4E
2XCLK(2C4)
3E
2XCLK
(5A2)
LS04
(2C1) MPUCLK
(2D4) 2XCLK
6B
CNTA(3C1)
CNTB(3C1)
CLK (3B1)
LS10
2D
RAS
HIGHØ2
(5C1)
S37
5E1
15Ω
RAS(4C4)
LS74
4E
SELRAS(3C3)
MPUCLK(3C1)
HIGHØ2(3B4)
HIGHØ2(5C1)
S37
5E1
SELRAS(6A2)
RAS-CAS LOGIC
HIGHØ1(3B4)
LS161
1D
CNTA (3B4,5B2)
CNTB(3B4,5B2,3C2)
MPUCLK(2C4,3A4,3B4)
CLK(3B1)
HØ4
÷ BY 5
+5
OSC
1B
CLK(3A4,6B4)
HØ4
HØ4
CLK(3C2,5B2,6B4,5B1)
MASTER OSCILLATOR
SIZE
C
CODE IDENT NO.
98438
DWG NO.
129861
LTR
A
SCALE NONE
-7
SHEET 2-3

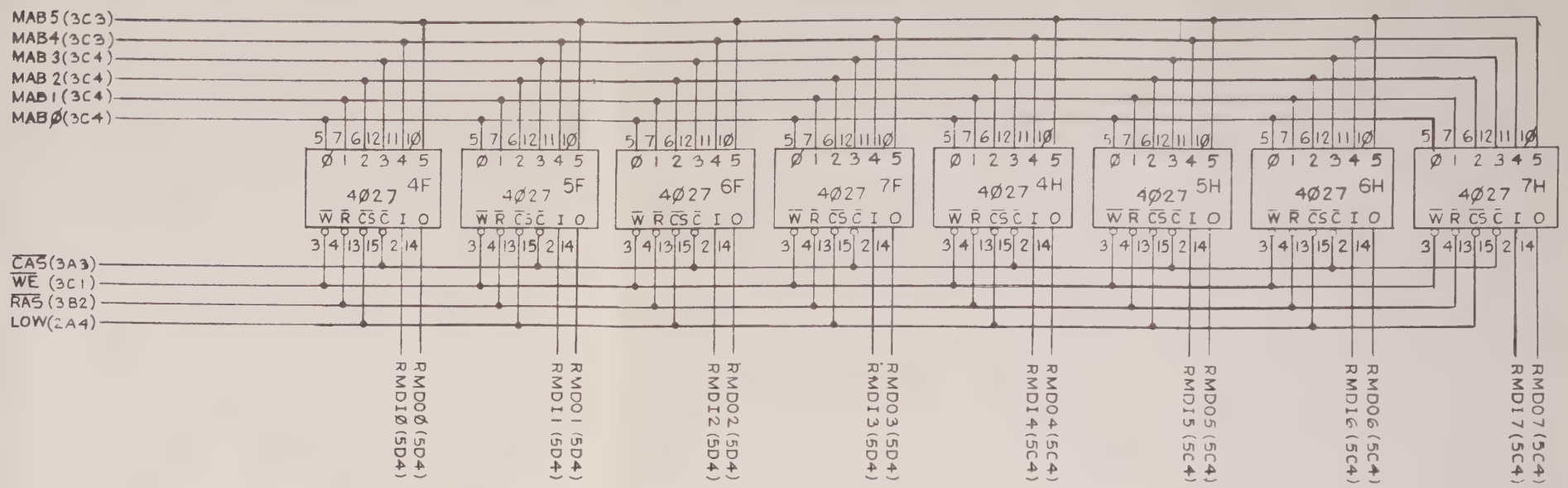

REFRESH MEMORY

SIZE	CODE IDENT NO.	DWG NO.	LTR
C	98438	129861	A
SCALE NONE		-7	SHEET 2-4

129861

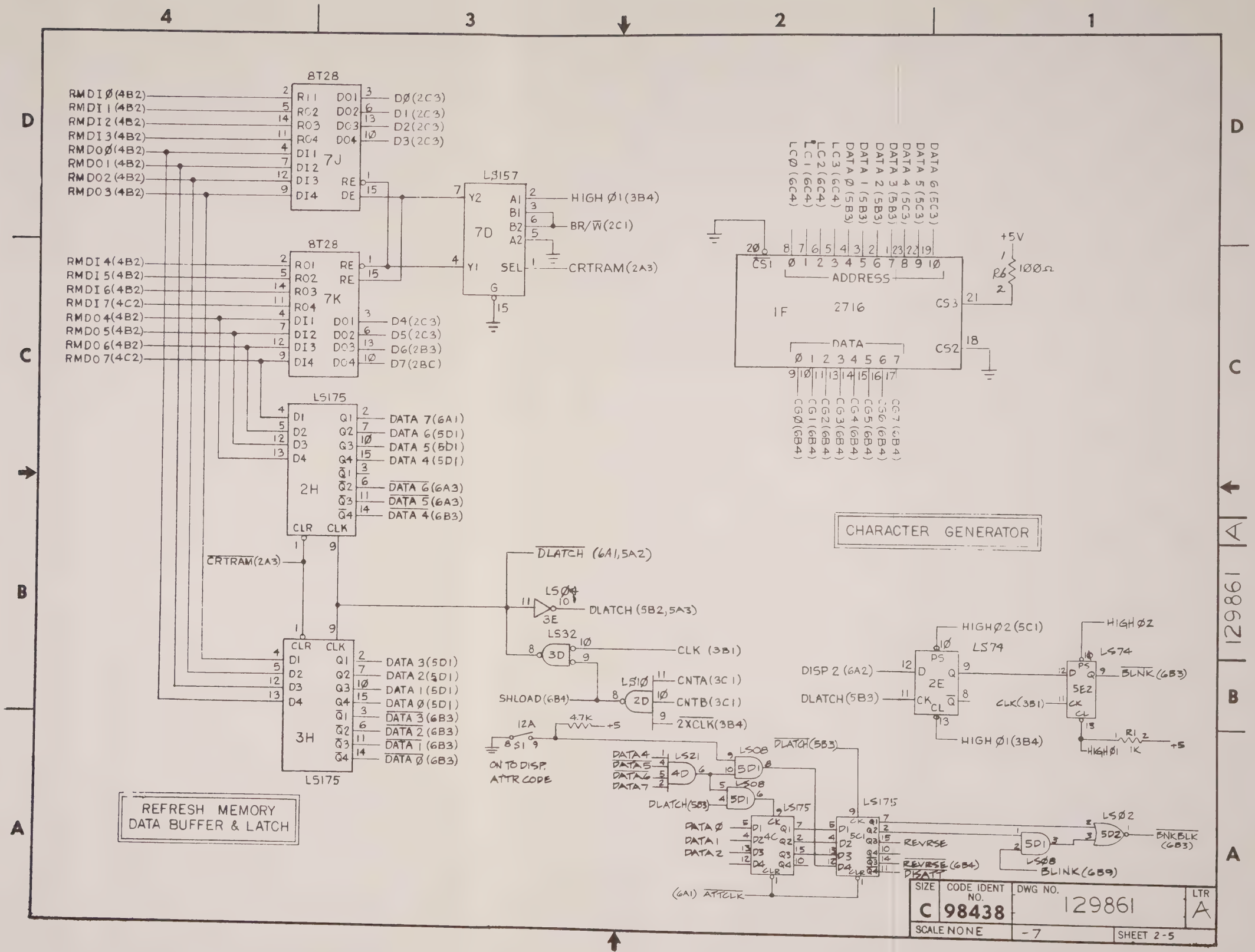

8T28
7J
RMDIØ(4B2)
RMDI1(4B2)
RMDI2(4B2)
RMDI3(4B2)
RMDOØ(4B2)
RMDO1(4B2)
RMDO2(4B2)
RMDO3(4B2)
DØ(2C3)
D1(2C3)
D2(2C3)
D3(2C3)
LS157
7D
HIGH Ø1(3B4)
BR/W̄(2C1)
CRTRAM(2A3)
8T28
7K
RMDI4(4B2)
RMDI5(4B2)
RMDI6(4B2)
RMDI7(4C2)
RMDO4(4B2)
RMDO5(4B2)
RMDO6(4B2)
RMDO7(4C2)
D4(2C3)
D5(2C3)
D6(2B3)
D7(2BC)
LS175
2H
DATA 7(6A1)
DATA 6(5D1)
DATA 5(5D1)
DATA 4(5D1)
DATA 6(6A3)
DATA 5(6A3)
DATA 4(6B3)
CRTRAM(2A3)
DLATCH (6A1,5A2)
LSØ4
3E
DLATCH (5B2,5A3)
LS32
3D
CLK (3B1)
LS1Ø
2D
CNTA(3C1)
CNTB(3C1)
2XCLK(3B4)
SHLOAD(6B4)
12A
S1
4.7K
+5
ON TO DISP. ATTR CODE
LS175
3H
DATA 3(5D1)
DATA 2(5D1)
DATA 1(5D1)
DATA Ø(5D1)
DATA 3(6B3)
DATA 2(6B3)
DATA 1(6B3)
DATA Ø(6B3)
REFRESH MEMORY DATA BUFFER & LATCH
LCØ(6C4)
LC1(6C4)
LC2(6C4)
LC3(6C4)
DATA Ø(5B3)
DATA 1(5B3)
DATA 2(5B3)
DATA 3(5B3)
DATA 4(5C3)
DATA 5(5C3)
DATA 6(5C3)
+5V
R6
100Ω
1F
2716
ADDRESS
DATA
CS1
CS2
CS3
CGØ(6B4)
CG1(6B4)
CG2(6B4)
CG3(6B4)
CG4(6B4)
CG5(6B4)
CG6(6B4)
CG7(6B4)
CHARACTER GENERATOR
HIGHØ2(5C1)
LS74
2E
DISP 2 (6A2)
DLATCH(5B3)
HIGH Ø1(3B4)
HIGHØ2
LS74
5E2
BLNK(6B3)
CLK(3B1)
R1
1K
+5
HIGHØ1
DATA4
DATA5
DATA6
DATA7
LS21
4D
LS08
5D1
DLATCH(5B3)
LS175
4C
DATA Ø
DATA 1
DATA 2
(6A1) ATTCLK
LS175
5C1
REVRSE
REVRSE(6B4)
DISATT
LSØ2
5D2
BNKBLK (6B3)
LSØ8
BLINK(6B9)
SIZE
C
CODE IDENT NO.
98438
DWG NO.
129861
LTR
A
SCALE NONE
-7
SHEET 2-5
129861
A

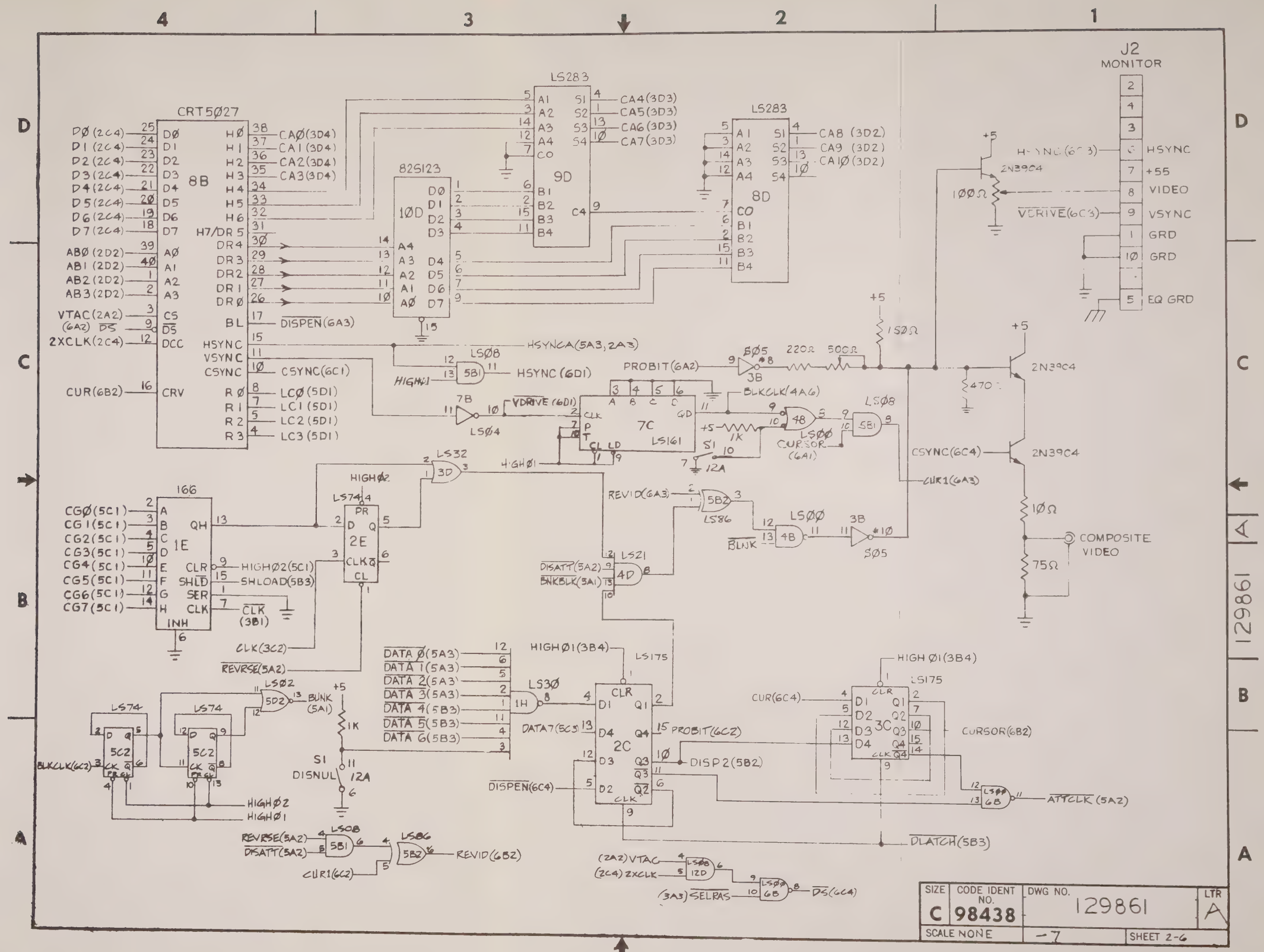

CRT5Ø27
8B
LS283
9D
LS283
8D
82S123
1ØD
J2
MONITOR
HSYNC
+55
VIDEO
VSYNC
GRD
GRD
EQ GRD
2N39C4
2N39C4
2N39C4
COMPOSITE VIDEO
166
1E
LS74
2E
LS32
3D
LS161
7C
LS175
2C
LS175
3C
LS74
5C2
LS74
5C2
LS3Ø
1H
LS86
5B2
LS21
4D
LSØØ
4B
LSØØ
LSØ8
5B1
LSØ4
7B
LSØ5
3B
LSØ2
5D2
LSØ8
5B1
LSØ6
5B2
LSØØ
6B
LSØØ
6B
LSØØ
12D
S1
DISNUL
12A
S1
12A
S1
1K
+5
150Ω
220Ω
500Ω
470Ω
100Ω
10Ω
75Ω
CA4(3D3)
CA5(3D3)
CA6(3D3)
CA7(3D3)
CA8 (3D2)
CA9 (3D2)
CA1Ø(3D2)
CAØ(3D4)
CA1(3D4)
CA2(3D4)
CA3(3D4)
DISPEN(6A3)
HSYNCA(5A3,2A3)
HSYNC(6D1)
CSYNC(6C1)
LCØ(5D1)
LC1(5D1)
LC2(5D1)
LC3(5D1)
PROBIT(6A2)
BLKCLK(4A6)
CURSOR (6A1)
CSYNC(6C4)
CUR1(6A3)
REVID(6A3)
BLNK
DISATT(5A2)
BNKBLK(5A1)
HIGHØ1
HIGHØ2
HIGHØ1(3B4)
DATA Ø(5A3)
DATA 1(5A3)
DATA 2(5A3)
DATA 3(5A3)
DATA 4(5B3)
DATA 5(5B3)
DATA 6(5B3)
DATA7(5C3)
PROBIT(6C2)
DISP2(5B2)
DISPEN(6C4)
CUR(6C4)
CURSOR(6B2)
ATTCLK (5A2)
DLATCH(5B3)
CGØ(5C1)
CG1(5C1)
CG2(5C1)
CG3(5C1)
CG4(5C1)
CG5(5C1)
CG6(5C1)
CG7(5C1)
HIGHØ2(5C1)
SHLOAD(5B3)
CLK (3B1)
CLK(3C2)
REVRSE(5A2)
BLKCLK(6C2)
BUNK (5A1)
REVRSE(5A2)
DISATT(5A2)
CUR1(6C2)
REVID(6B2)
(2A2)VTAC
(2C4)2XCLK
(3A3)SELRAS
DS(6C4)
SIZE C
CODE IDENT NO. 98438
DWG NO. 129861
LTR A
SCALE NONE
-7
SHEET 2-6
129861

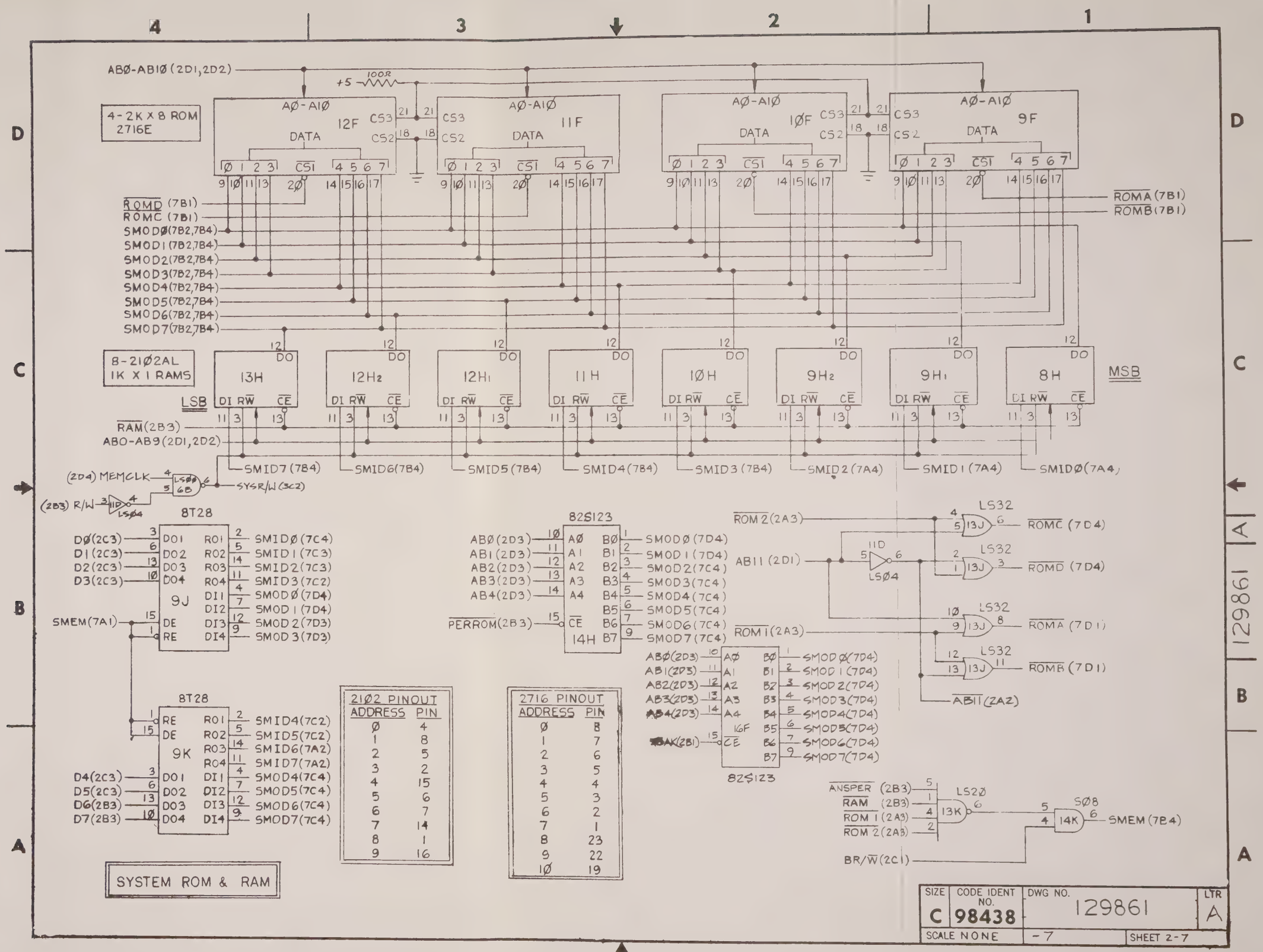
4-2K X 8 ROM 2716E
12F
11F
10F
9F
A0-A10
DATA
CS3
CS2
CS1
+5
100Ω
AB0-AB10 (2D1,2D2)
ROMD (7B1)
ROMC (7B1)
SMOD0(7B2,7B4)
SMOD1(7B2,7B4)
SMOD2(7B2,7B4)
SMOD3(7B2,7B4)
SMOD4(7B2,7B4)
SMOD5(7B2,7B4)
SMOD6(7B2,7B4)
SMOD7(7B2,7B4)
ROMA (7B1)
ROMB (7B1)
8-2102AL 1K X 1 RAMS
13H
12H2
12H1
11H
10H
9H2
9H1
8H
LSB
MSB
DO
DI
RW
CE
RAM(2B3)
AB0-AB9(2D1,2D2)
SMID7(7B4)
SMID6(7B4)
SMID5(7B4)
SMID4(7B4)
SMID3(7B4)
SMID2(7A4)
SMID1(7A4)
SMID0(7A4)
(2D4) MEMCLK
LS00 6B
SYSR/W(3C2)
(2B3) R/W
LS04
8T28
9J
D0(2C3)
D1(2C3)
D2(2C3)
D3(2C3)
SMEM(7A1)
DO1
DO2
DO3
DO4
RO1
RO2
RO3
RO4
DI1
DI2
DI3
DI4
DE
RE
SMID0(7C4)
SMID1(7C3)
SMID2(7C3)
SMID3(7C2)
SMOD0(7D4)
SMOD1(7D4)
SMOD2(7D3)
SMOD3(7D3)
8T28
9K
SMID4(7C2)
SMID5(7C2)
SMID6(7A2)
SMID7(7A2)
SMOD4(7C4)
SMOD5(7C4)
SMOD6(7C4)
SMOD7(7C4)
D4(2C3)
D5(2C3)
D6(2B3)
D7(2B3)
82S123
14H
AB0(2D3)
AB1(2D3)
AB2(2D3)
AB3(2D3)
AB4(2D3)
PERROM(2B3)
SMOD0(7D4)
SMOD1(7D4)
SMOD2(7C4)
SMOD3(7C4)
SMOD4(7C4)
SMOD5(7C4)
SMOD6(7C4)
SMOD7(7C4)
82S123
16F
BAK(2B1)
SMOD0(7D4)
SMOD1(7D4)
SMOD2(7D4)
SMOD3(7D4)
SMOD4(7D4)
SMOD5(7D4)
SMOD6(7D4)
SMOD7(7D4)
ROM 2(2A3)
ROM 1(2A3)
AB11 (2D1)
11D
LS04
LS32
13J
ROMC (7D4)
ROMD (7D4)
ROMA (7D1)
ROMB (7D1)
AB11(2A2)
ANSPER (2B3)
RAM (2B3)
ROM 1 (2A3)
ROM 2 (2A3)
BR/W(2C1)
LS20
13K
S08
14K
SMEM (7B4)
2102 PINOUT
ADDRESS PIN
0 4
1 8
2 5
3 2
4 15
5 6
6 7
7 14
8 1
9 16
2716 PINOUT
ADDRESS PIN
0 8
1 7
2 6
3 5
4 4
5 3
6 2
7 1
8 23
9 22
10 19
SYSTEM ROM & RAM
SIZE C
CODE IDENT NO. 98438
DWG NO. 129861
LTR A
SCALE NONE
-7
SHEET 2-7
129861

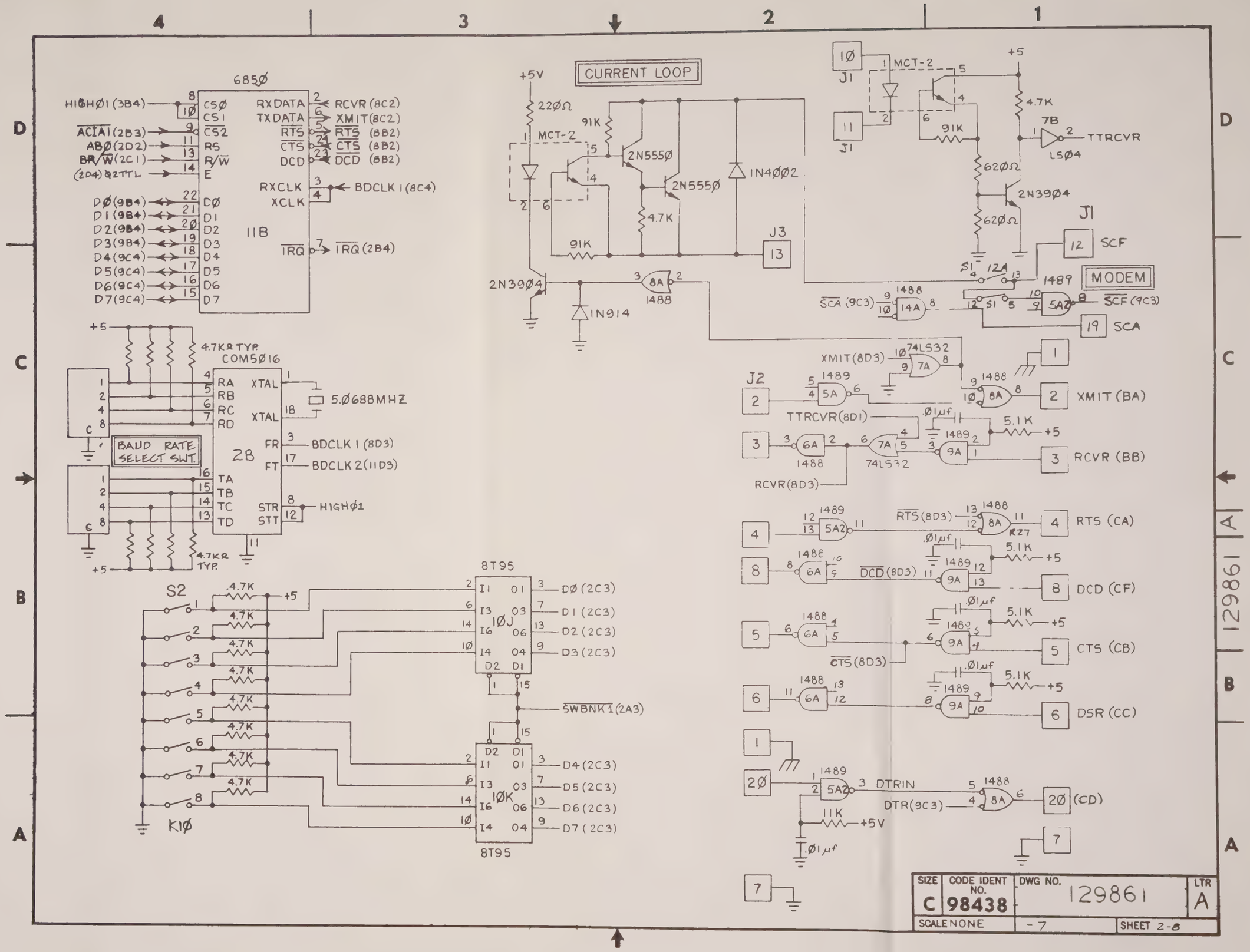

CURRENT LOOP
MODEM
BAUD RATE SELECT SWT.
685Ø
11B
COM5Ø16
2B
8T95
1ØJ
1ØK
S2
K1Ø
J1
J2
J3
TTRCVR
SCF
SCA
XMIT (BA)
RCVR (BB)
RTS (CA)
DCD (CF)
CTS (CB)
DSR (CC)
(CD)
SIZE C
CODE IDENT NO. 98438
DWG NO. 129861
LTR A
SCALE NONE
SHEET 2-8
129861 A

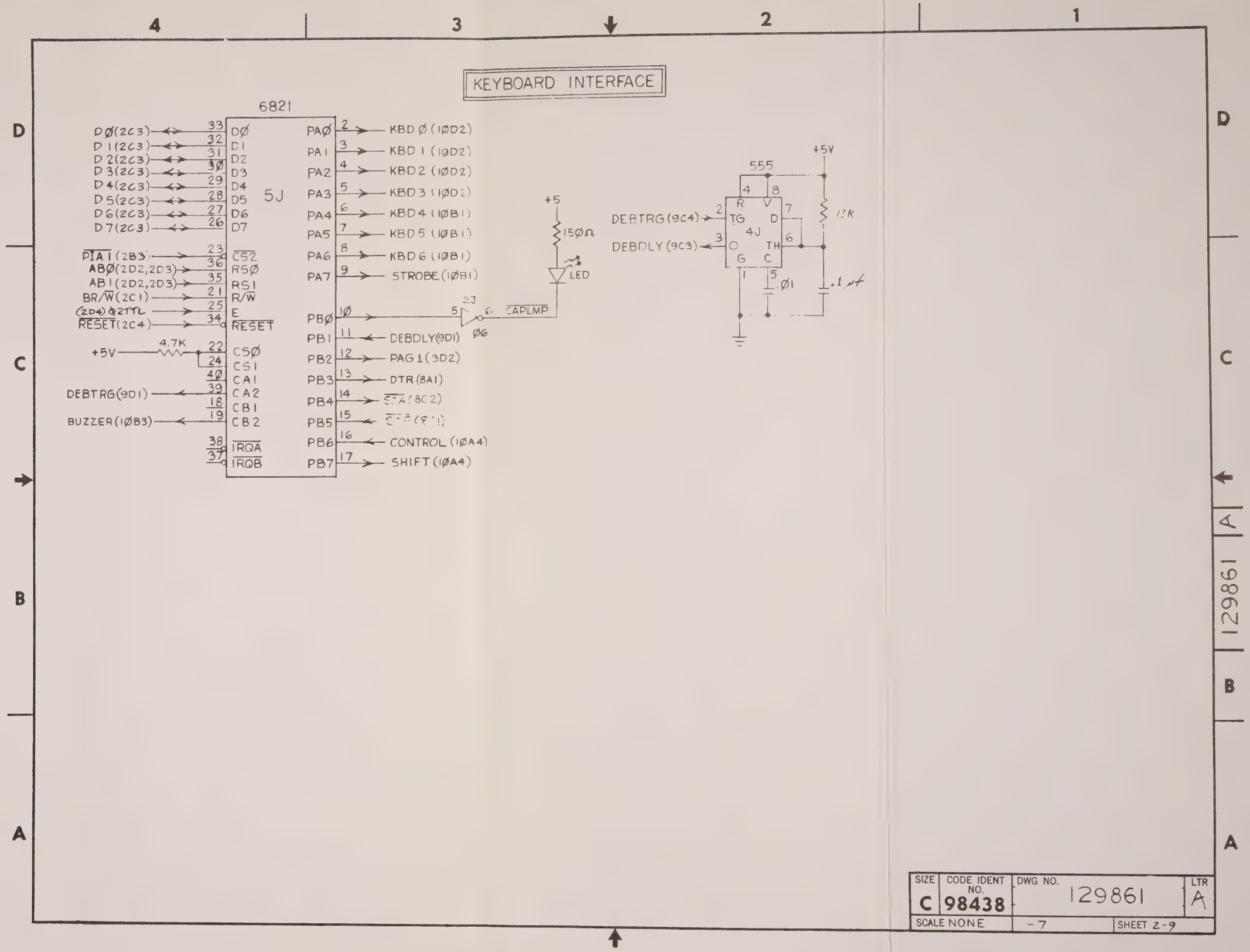

SIZE	CODE IDENT NO.	DWG NO.	LTR
C	98438	129861	A
SCALE NONE		-7	SHEET 2-9

129861 A

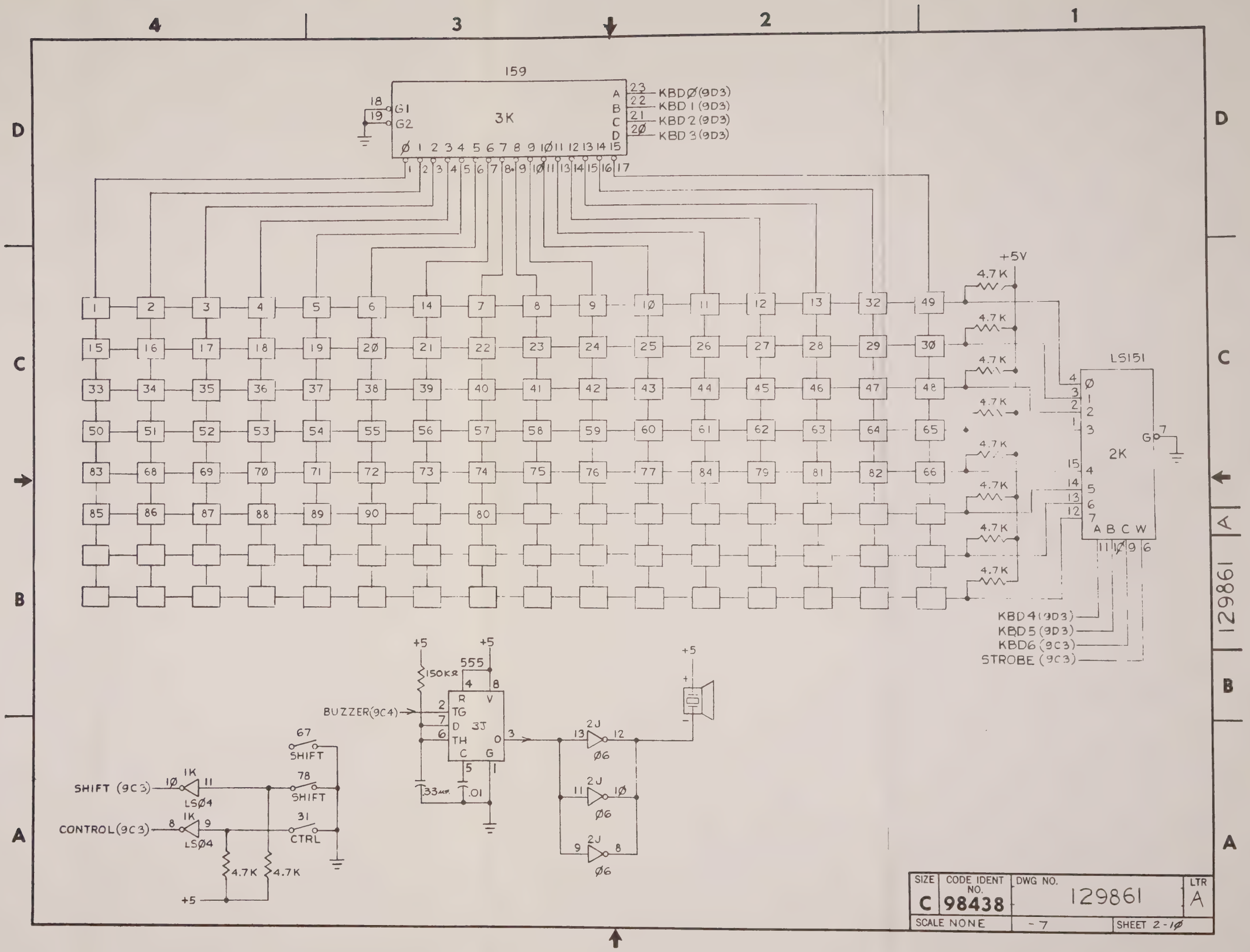

SIZE	CODE IDENT NO.	DWG NO.	LTR
C	98438	129861	A
SCALE NONE		-7	SHEET 2-1Ø

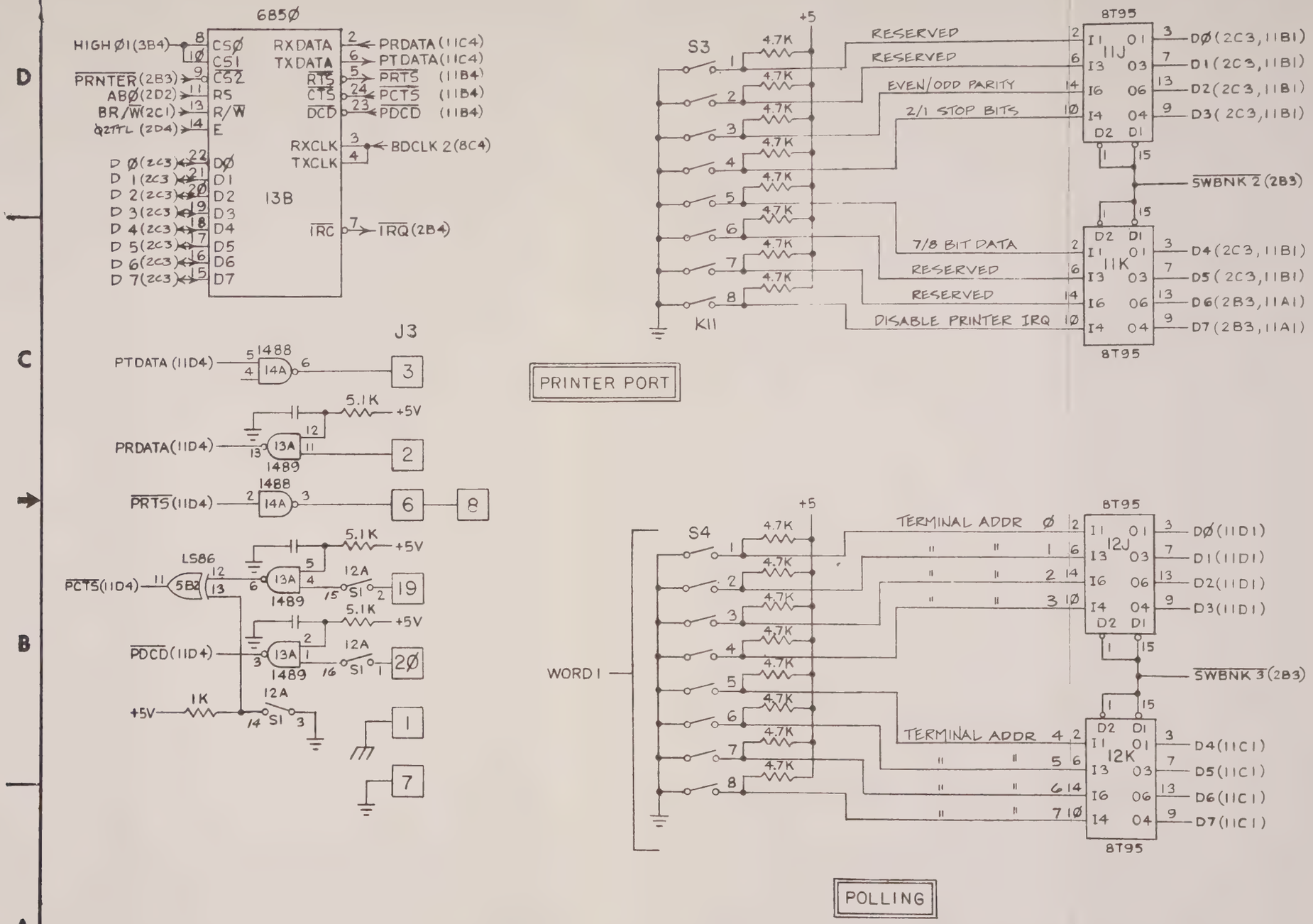

SIZE	CODE IDENT NO.	DWG NO.	LTR
C	98438	129861	A
SCALE NONE		-7	SHEET 2-11

CONNECTOR PIN ASSIGNMENTS

J1

PIN NO.	FUNCTION	SHEET
1		
2		
3		
4		
5		
6		
7		
8		
9		

J2

PIN NO.	FUNCTION	SHEET
1	GND	
2		
3		
4		
5		
6	HSYNC	6D1
7	+55	6D1
8	VIDEO	6D1
9	VSYNC	6D1
10	GND	
11	GND	
12	EQ GND	

J3

PIN NO.	FUNCTION	SHEET
1	FRAME GND	
2	XMIT	8C1
3	RCVR	8C1
4	RTS	8B1
5	CTS	8B1
6	DSR	8B1
7	GND	
8	DCD	8B1
9		
10		
11		
12	YY	8C1
13		
14		
15		
16		
17		
18		
19	XX	8A1
20	DTR	8A1
21		
22		
23		
24		
25		

J4

PIN NO.	FUNCTION	SHEET
1	FRAME GND	
2	XMIT	8C2
3	RCVR	8C2
4	RTS	8B2
5	CTS	8B2
6	DSR	8B2
7	GND	
8	DCD	8B2
9		
10		
11		
12		
13		
14		
15		
16		
17		
18		
19		
20	DTR	8A2
21		
22		
23		
24		
25		

J5

PIN NO.	FUNCTION	SHEET
1	FRAME GND	
2	PRDATA	11C3
3	PTDATA	11C3
4		
5		
6	$\overline{\text{PRTS}}$	11B3
7	GND	
8	$\overline{\text{PRTS}}$	11B3
9		
10		
11		
12		
13		
14		
15		
16		
17		
18		
19	$\overline{\text{PCTS}}$	11B3
20	$\overline{\text{PDCD}}$	11B3
21		
22		
23		
24		
25		

SWITCH ASSIGNMENTS

SWITCH	SECT	FUNCTION	SHEET
S1	1	PDCD	11B4
	2	PCTS	11B4
	3	INVPCTS	11B4
	4		
	5		
	6	DISNUL	6A3
	7	CURB_INK	6C2
S2	8	DISP ATTR	5A3
	1		
	2		
	3		
	4		
	5		
	6		
	7		
	8		
S3	1		
	2		
	3		
	4		
	5		
	6		
	7		
	8		
S4	1		
	2		
	3		
	4		
	5		
	6		
	7		
	8		

SIZE	CODE IDENT NO.	DWG NO.	LTR
C	98438	129861	A
SCALE NONE		-7	SHEET 2-12

129861 A

REVISIONS

LTR	SHEET	DESCRIPTION	DATE	APPROVED
A		INC ADCN 1, 2 REDRAWN SHT 3, ADDED SHT 4 CREATED -11 W. Kelly 11-29-78	11/30/78	R.D. Pollock H. Turner

NOTE:

1. UL LISTED & CERTIFIED.

DASH NO.	NEXT ASSY	USED ON
-1	129850	DL129850

APPLICATION

UNLESS OTHERWISE SPECIFIED
DIM. IN INCHES
TOLERANCES
X ± .1
.XX ± .03
.XXX ± .010
ANGLES ± 0.5°
MACH. FIN.
√

DR W. Kelly 7-5-78
CHK
DSGN
ENGR H. Turner 7/5/78
PROJ
REL H. Turner 7/5/78
CUSTOMER APPD

LSi LEAR SIEGLER, INC.
ELECTRONIC INSTRUMENTATION DIV.
ANAHEIM, CALIF.

CABLE ASSY - POWER
ADM 31

SIZE A | CODE IDENT 98438 | 129868 | REV A

SCALE | SHEET 1 OF 2

FIND NO.	QTY REQD		-11	-1	STOCK NO.	PART OR IDENTIFYING NO.	NOMENCLATURE OR DESCRIPTION	REMARKS
1				✓		-1	CABLE ASSY, 115V	
2			✓			-11	CABLE ASSY, 230V	
3								
4								
5				1		3-87025-5	CONN HOUSING, 11 PIN	AMP NOTE 1
6			10	10		87023-1	CONTACT	AMP NOTE 1
7			1	1		09-50-3091	CONN HOUSING, 2139	MOLEX NOTE 1
8			7	7		08-50-0105	CONTACT, 18-24 AWG, 2478	MOLEX NOTE 1
9			3	3		31889-1	LUG, RING #10	AMP NOTE 1
10			2	2		2-350803-2	LUG, 250 TAB	AMP NOTE 1
11			3	1		87116-2	KEY	AMP
12			1	1		15-04-0219	KEY	MOLEX
13			1			2-87025-9	CONN HOUSING, 13 PIN	AMP NOTE 1
14								
15								
16			A/R	A/R		22 AWG GRN	WIRE INS UL 1061	NOTE 1
17			A/R	A/R		18 AWG WHT	WIRE, INS, UL 1007	NOTE 1
18			A/R	A/R		BLK		
19			A/R	A/R		GRN		
20			A/R	A/R		22 AWG WHT	WIRE, INS, UL1061	NOTE 1
21			A/R	A/R		RED		
22			A/R	A/R		YEL		
23			A/R	A/R		ORG		
24			A/R	A/R		GRAY		
25			A/R	A/R		VIO		

SIZE A
FSCM NO. 93438
SH 2
129868
REV A

	TERMINATION INFORMATION						WIRE INFORMATION						
			POWER SUPPLY FROM		LOGIC BOARD TO		FIND NO./NOTES					ROUTING	LGTH
							FROM END		TO END		WIRE OR CABLE		
	CABLE NO.	WIRE NO. OR COLOR	REF DES	PIN	REF DES	PIN	CONN	TERMINATION	CONN	TERMINATION			
1	EQ GRD	GRN	P1	1	GRD STUD			6		9	19		6
2	AC HOT	WHT		2	S1	3		6		10	17		9
3	AC HOT	BLK		3	F1	SIDE		6		10	18		6
4	KEY			4	P2	6		11		12			
5	+5ST	VIO		5		7		6		8	25		
6	-12	YEL		6		3	5	6	7	8	22		15
7	+12	RED		7		5		6		8	21		
8	GRD	GRY		8	P2	4		6		8	24		
9	GRD	GRN		8	GRD STUD			SECOND WIRE		9	16		6
10	GRD	WHT		9	P2	1		6		8	20		
11	+5	ORN		10		2		6		8	23		15
12	+5	ORN	P1	11		2		6		SECOND WIRE	23		
13	EQ GRD	GRN	GRD STUD		P2	8		9		8	19		18
14													
15													
16													
17													
18													
19													
20													
21													
22													
23													
24													
25													

CODE NOTES:

SIZE	CODE IDENT		REV
A	98438	129868	A
SCALE		SHEET 3	

LINE NO.	TERMINATION INFORMATION: CABLE NO.	WIRE NO. OR COLOR	POWER SUPPLY FROM: REF DES	PIN	LOGIC BOARD TO: REF DES	PIN	WIRE INFORMATION: FIND NO./NOTES: FROM END: CONN	TERMINATION	TO END: CONN	TERMINATION	WIRE OR CABLE	ROUTING	LGTH
1	EQ GRD	GRN	F1	1	GRD STUD			6		9	19		6
2	ICEY	—		2	—	—		11		—	—		
3	AC RET	WHT		3	S1	3		6		10	17		9
4	ICEY	—		4	—	—		11		—	—		
5	AC HOT	BLK		5	F1	SIDE		6		10	18		6
6	KEY	—		6	P2	6		11		12	—		
7	+55	VIO		7		7	13	6	7	8	25		
8	-12	YEL		8		3		6		8	22		15
9	+12	RED		9		5		6		8	21		
10	GRD	GRY		10	P2	4		6		8	24		
11	EQ GRD	GRN		10	GRD STUD			SECOND WIRE		9	16		6
12	GRD	WHT		11	P2	1		6		8	20		
13	+5	ORN		12		2		6		8	23		15
14	+5	ORN	P1	13		2		6		SECOND WIRE	23		
15	EQ GRD	GRN	GRD STUD		P2	8		9		8	19		16
16													
17													
18													
19													
20													
21													
22													
23													
24													
25													

CODE NOTES:

SIZE	CODE IDENT		REV
A	98438	129868	A
SCALE		SHEET 4	

7-8801d (7-84)

REVISIONS

LTR	SHEET	DESCRIPTION	DATE	APPROVED
		INC ADCN 1-2 RENUMBER P2 WAS 1-12	9/27/78	R D Pollock
		W. Kelly 9-27-78	9/27/78	H. Turner

NOTES

1. UL LISTED & CERTIFIED

DASH NO.	NEXT ASSY	USED ON
-1	129850	DL129850

APPLICATION

UNLESS OTHERWISE SPECIFIED
DIM. IN INCHES
TOLERANCES
X ± .1
.XX ± .03
.XXX ± .010
ANGLES ± 0.5°
MACH. FIN.
√

DR W. Kelly 7-5-78
CHK
DSGN
ENGR
PROJ
REL H. Turner 9/5/78
CUSTOMER APPD

LSi LEAR SIEGLER, INC.
ELECTRONIC INSTRUMENTATION DIV.
ANAHEIM, CALIF.

CABLE ASSY - MONITOR, ADM 31

SIZE A | CODE IDENT 98438 | 129869 | REV A

SCALE | SHEET 1 OF 3

FIND NO.	QTY REQD			-1	STOCK NO.	PART OR IDENTIFYING NO.	NOMENCLATURE OR DESCRIPTION	REMARKS
1				✓		-1	CABLE ASSY-MONITOR	
2								
3								
4								
5				1	809025	583479-1	CONN HOUSING	AMP
6				6	809062	583259-2	CONTACT	AMP
7				1		1-640440-0	CONN HOUSING	AMP
8								
9				1	835010	2-322777-1	LUG, SPADE, #6	AMP
10				1			POLARIZING KEY	AMP
11								
12								
13								
14								
15								
16								
17								
18								
19				A/R		22 AWG WHT	WIRE, INS UL 1061	NOTE 1
20				A/R		BLK		
21				A/R		GRN		
22				A/R		YEL		
23				A/R		BLU		
24				A/R		GRAY		
25				A/R		VIO		

SIZE A FSCM NO. 98438

SH 2 129869

REV A

LINE NO.	TERMINATION INFORMATION: CABLE NO.	WIRE NO. OR COLOR	TERM-LOGIC BD FROM: REF DES	PIN	MONITOR TO: REF DES	PIN	WIRE INFORMATION: FIND NO./NOTES: FROM END: CONN	TERMINATION	TO END: CONN	TERMINATION	WIRE OR CABLE	ROUTING	LGTH
1	GRD	WHT	P2	10	P101	1				6	19		
2				9	NO CONNECTION								
3				8	NO CONNECTION								15
4	KEY			7	NO CONNECTION			10					
5		GRN		6	GRD SCREW					9	21		19
6	HDR	BLU		5	P101	6	7		5	6	23		
7	+55	VIO		4		7				6	25		15
8	VID	YEL		3		8				6	22		
9	VDR	BLK		2		9				6	20		
10	GRD	GRY		1		10				6	24		
11													
12													
13													
14													
15													
16													
17													
18													
19													
20													
21													
22													
23													
24													
25													

CODE NOTES:

SIZE	CODE IDENT		REV
A	98438	129869	A
SCALE		SHEET 3	

7-0601d (7-64)

REVISIONS				
LTR	SHEET	DESCRIPTION	DATE	APPROVED

NOTES

1. THIS ADAPTER BOARD IS INTENDED TO REPLACE CONFIGURATIONS OF EPROMS USED ON 129860-7 (REF 129541)
   - -1 MAY REPLACE CONFIGURATION 2
   - -11 " " " 3

2. PROGRAM PER 129874

3. TO APPLY THIS BD - 24 PIN SOCKETS MUST BE INSTALLED ON 860-7 AT 9H & 12H & 14 PIN SOCKET AT 13J.

DASH NO.	NEXT ASSY	USED ON
-1		

APPLICATION

UNLESS OTHERWISE SPECIFIED
DIM. IN INCHES
TOLERANCES
.X ± .1
.XX ± .03
.XXX ± .010
ANGLES ± 0.5°
MACH. FIN.

DR W. Kelly 12-13-78
CHK
DSGN
ENGR
PROJ
REL
CUSTOMER APPD

LEAR SIEGLER, INC.
ELECTRONIC INSTRUMENTATION DIV.
ANAHEIM, CALIF.

P.C. BOARD ASSY
PROM ADAPTER, ADM 31(-7)

SIZE A | CODE IDENT 98438 | 129872 | REV

SCALE | SHEET 1 OF 5

FORM 10 1032

FIND NO.	QTY REQD		-11	-1	STOCK NO.	PART OR IDENTIFYING NO.	NOMENCLATURE OR DESCRIPTION	REMARKS
1				✓	CONFIG 2	-1	PROG ADAPTER BD ASSY ADM-31	-7 BD ONLY
2			✓		CONFIG 3	-11	" " " "	PRINTER OPTION
3								
4								
5			1	1		-3	PRINTED WIRING BOARD	
6								
7			5	4	813051	82S181	PROM (2)	SIGNETICS
8			1	1		129467-139	I.C.	
9								
10			1	1		CA-14PF-16	DIP PLUG, 14 PIN	CIRCUIT ASSY
11			2	2		CA-24PF-16	DIP PLUG, 24 PIN	"
12								
13			1	1		128533-102	RES 1K	
14								
15			2	2		128518-103	CAP .01	
16			2	2		129469-106	CAP 10 UF	
17			2	2		128518-106	CAP 10 UF	
18			1	1		640357-3	SOCKET, 14 PIN	AMP
19			7	7		640361-3	SOCKET, 24 PIN	AMP
20			REF	REF		129874-001000	PROM	(2)
21			REF	REF		-002000		
22			REF	REF		-003000		
23			REF	REF		-004000		
24			REF			-005000		
25								

SIZE A | FSCM NO. 98438 | SH 2 | 129872 | REV

NOTES:

1. FOR REQUIREMENTS REFER TO 129317 (SOLDER MASK REQD)
2. ALL HOLES .035 DIA MINIMUM AFTER PLATING.

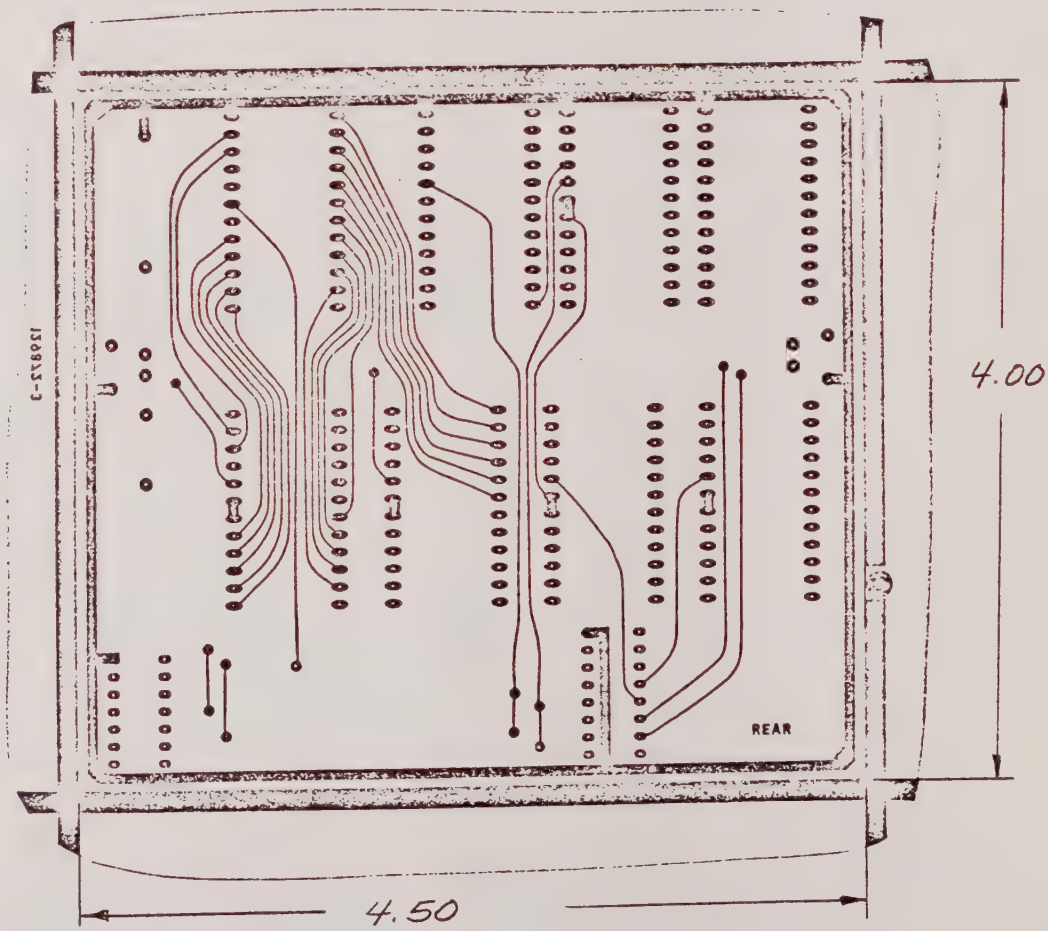

SIZE	CODE IDENT		
A	98438	129872	
SCALE 1/1		SHEET 3	

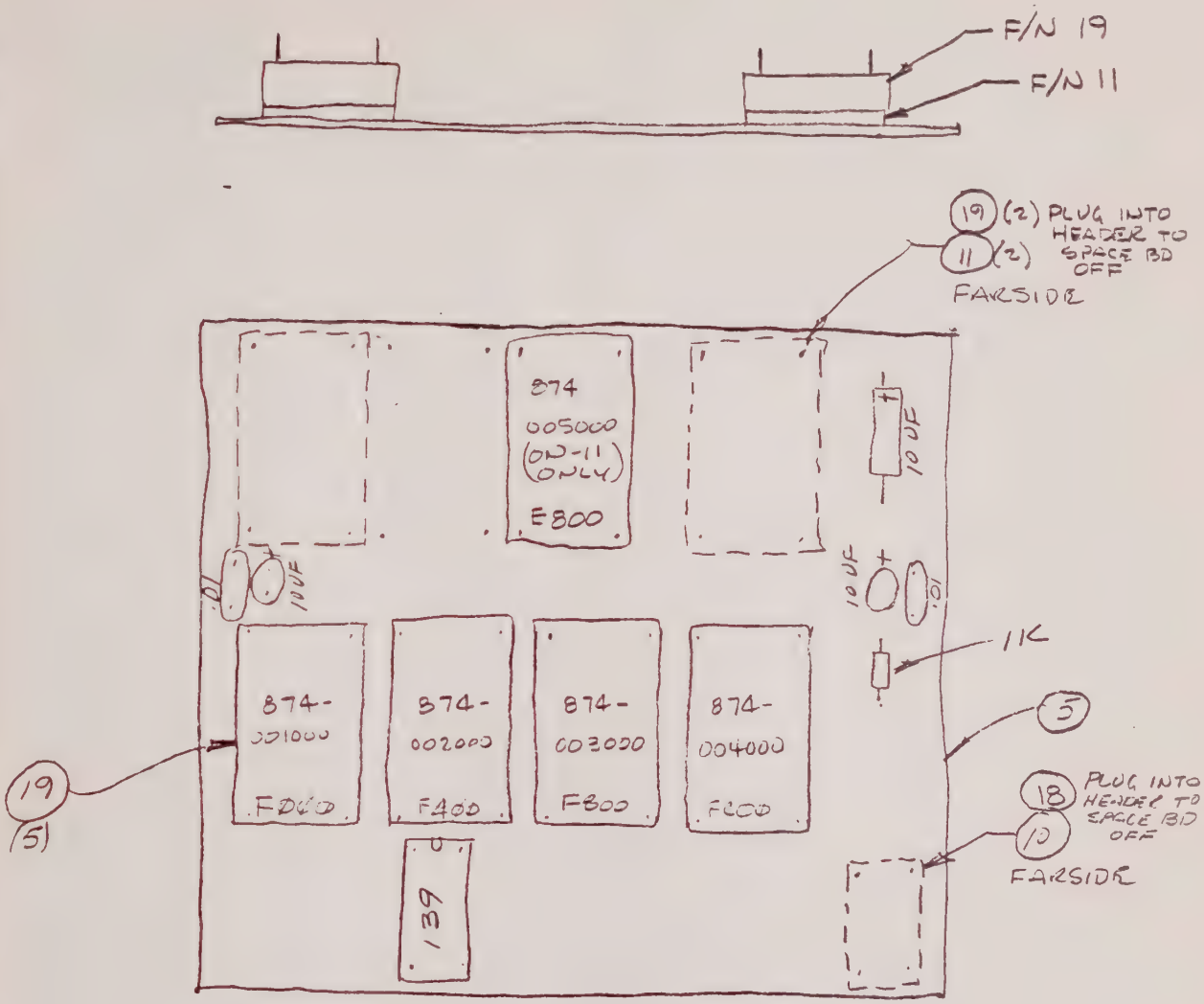

— 1 ASSY
— 11 ASSY (W/PRINTER OPTION)

SIZE	CODE IDENT		REV
A	98438	129872	
SCALE		SHEET 4	

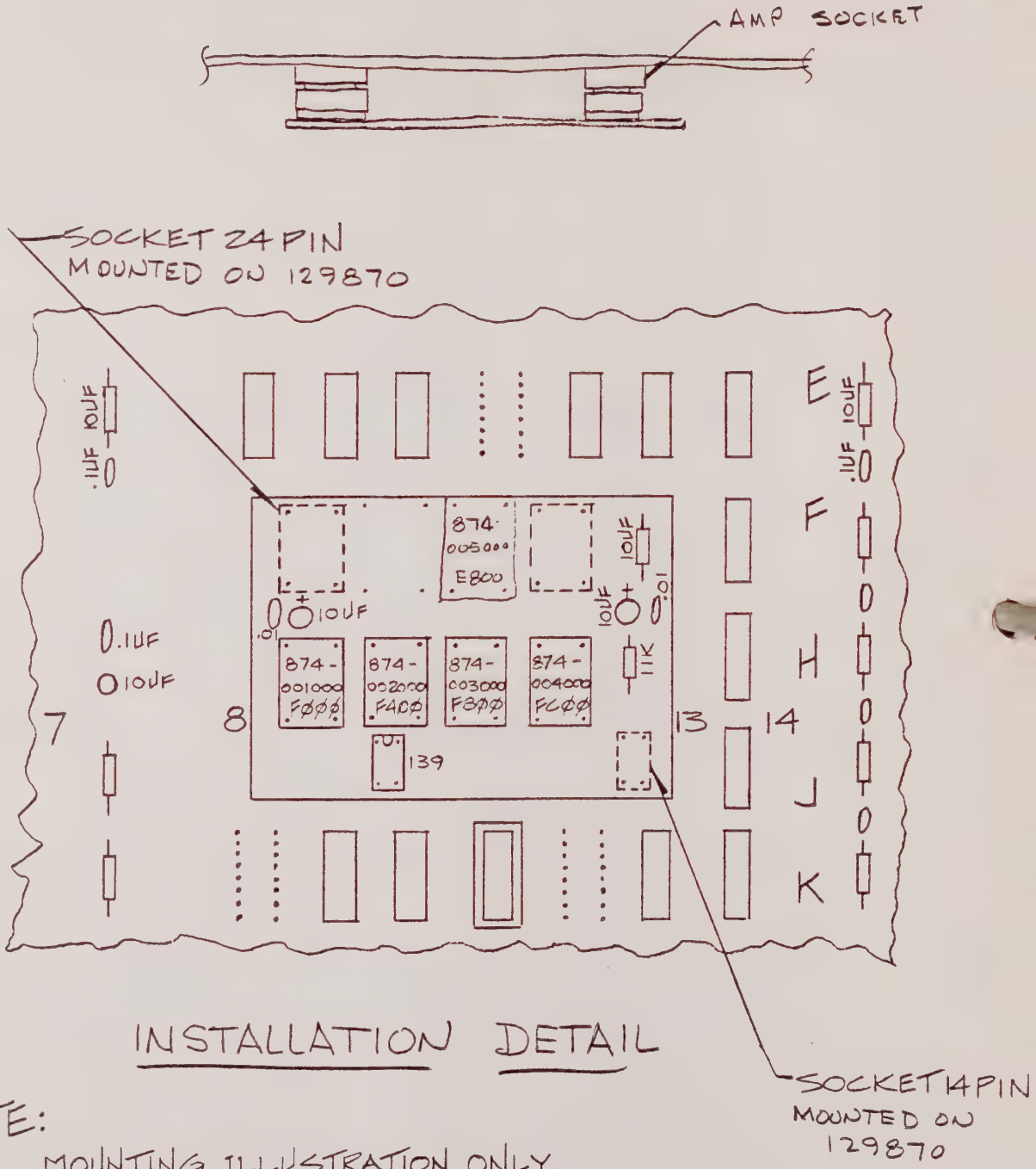

INSTALLATION DETAIL

NOTE:

MOUNTING ILLUSTRATION ONLY.
NOT TO SCALE.

SIZE	CODE IDENT	
A	98438	129872
SCALE NONE		SHEET 5

Form # 10-1011a

REVISIONS

LTR	SHEET	DESCRIPTION	DATE	APPROVED

CONTENTS

	DESCRIPTION	SHEET
OPT 1	PROM/ROM TABULATION	2
OPT 2	PRINTER	3
OPT 3	POLLING	4
OPT 4	COMPOSITE VIDEO	5
OPT 5	ANSWER BACK	6
OPT 6	ALTERNATE CHAR GEN	7
OPT 7	DIRECT CONNECT	8
~~OPT 10~~	~~230V POWER~~ VOID	~~9~~
OPT 20	CABLE, RS-232/CUR LOOP	10
OPT 22	CABLE, PRINTER	10
OPT 24	CABLE, COMPOSITE VIDEO	10

DASH NO.	NEXT ASSY	USED ON
—	129870	—
—	129850	129500

APPLICATION

UNLESS OTHERWISE SPECIFIED
DIM. IN INCHES
TOLERANCES
.X ± .1
.XX ± .03
.XXX ± .010
ANGLES ± 0.5°
MACH. FIN.

DR W. Kelly 1-25-74
CHK
DSGN
ENGR
PROJ W. Kelly 2-12-74
REL
CUSTOMER APPD

LEAR SIEGLER, INC.
ELECTRONIC INSTRUMENTATION DIV.
ANAHEIM, CALIF

CONFIGURATION CONTROL
ADM31

SIZE	CODE IDENT		REV
A	98438	129543	

SCALE | SHEET 1 OF 10

PROM TABULATION

CONFIGURATION No.	PERSONALITY 825123 LOCATION 14H 129753-	PROGRAM E000 2716 LOCATION 9F 129827-	PROGRAM E800 2716 LOCATION 10F 129827-	PROGRAM F000 2716 LOCATION 11F 129827-	PROGRAM F800 2716 LOCATION 12F 129827-	
1	007000	—	—	002011	002012	STD
2	007000	—	002010	002011	002012	+ PRINTER OPT
3						
4						
5						
6						
7						
8						
9						
10						
11						
12						
13						
14						
15						
16						
17						
18						
19						
20						
21						
22						
23						
24						
25						
26						
27						
28						
29						
30						

SIZE	CODE IDENT		RE
A	98438	129543	
SCALE		SHEET 2	

ITEM NO.	QTY REQD					PARTS LIST			
						PART NUMBER	DESCRIPTION	LOCATION/REF DES	NOTES
1					1	206584-1	CONN 25 PIN	AMP	
2					1	129824-6850	I.C.		
3					1	128348-1439	I.C.		
4					1	129327-00	PROM		C
5					1	128348-9T97	I.C.		
6					1	1A2160S1GF	SWITCH	EECO	
7					1	1-435668-8	SWITCH, 8 POS	AMP	
8					1	785-1-R4.7K	RES MOD 4.7K	BECKMAN	
9					1	129473-2	JACK SOCKET		
10					1	128533-512	RES, 5.1K		
11					1	128518-102	CAP, .01 UF		
12					1	640361-3	SOCKET, 24 PIN	AMP	
13					1	129866-5	CLOSURE		B

A. PARTS INSTALL ON 129870, SEE DWG FOR LOCATION.

B. THIS PART INSTALLS ON NEXT ASSY 129850.-REPLACES EXISTING PART.

C. PROGRAM PRIOR TO INSTALLATION.

OPTION 2	SIZE A	CODE IDENT 98430	129543 REV
TITLE PRINTER OPTION	SCALE		SHEET 3
SHEET 1 OF 1			

FIND NO.	QTY REQD				PARTS LIST			
					PART NUMBER	DESCRIPTION	LOCATION/REF DES	NOTES
1								
2								
3				2	128343-ST97	IC		
4				1	129827-00	PROM		B
5				1	1-455668-8	SWITCH	AMP	
6				1	735-1-R4.7K	RES MOD	BECKMAN	
7				1	640361-3	SOCKET, 24 PIN	AMP	
8								
9								
10								
11								
12								
13								

A. PARTS INSTALL ON 129870, SEE DWG FOR LOCATION.

B. PROGRAM PRIOR TO INSTALLATION.

OPTION 3	SIZE A	CODE IDENT 98438	129543 REV
TITLE POLLING OPTION			
SHEET 1 OF 1	SCALE		SHEET 4

Item No.	QTY REQD				PARTS LIST			
					PART NUMBER	DESCRIPTION	LOCATION/REF DES	NOTES
1								
2								
3				2	2N3904	TRANSISTOR		
4				1	51-153-0000	JACK	SEALECTRO	
5				1	128533-100	RES 100		
6				1	128533-750	RES 75		
7								
8								
9								
10				1	51-107-3059	PLUG, COAX	SEALECTRO	B/C
11								
12								
13								

A. PARTS INSTALL ON 129870. SEE DWG FOR LOCATION.

B. IF INSTALLED ON RG59/U FOR CUSTOMER BY LSI PART No. 51-124-3059 MAY BE SUBSTITUTED.

C. FURNISHED LOOSE WITH EQUIPMENT AS PART OF THIS OPTION.

OPTION 4	SIZE A	CODE IDENT 98438	129543	REV
TITLE COMPOSITE VIDEO				
SHEET 1 OF 1	SCALE		SHEET 5	

FIND NO.	QTY REQD				PARTS LIST			
					PART NUMBER	DESCRIPTION	LOCATION/REF DES	NOTES
1								
2								
3				1	129753-00	PROM		B
4								
5				1	640358-3	SOCKET, 16 PIN	AMP	
6								
7								
8								
9								
10								
11								
12								
13								

A. PARTS INSTALLED ON 129870 - SEE DWG FOR LOCATION

B. PROGRAM PRIOR TO INSTALLATION. CODE IS DETERMINED BY CUSTOMER REQMTS. SEE DTO FOR CODE

OPTION 5	SIZE A	CODE IDENT 98438	129543	REV
TITLE ANSWER BACK				
SHEET 1 OF 1	SCALE		SHEET 5	

FIND NO.	QTY REQD				PARTS LIST			
					PART NUMBER	DESCRIPTION	LOCATION/REF DES	NOTES
1				✓	6-1			
2								
3								
4								
5								
6				1	129827-00	EPROM		B
7								
8				1	640361-3	SOCKET, 24 PIN	AMP	
9								
10								
11								
12								
13								

A. PARTS INSTALL ON 129870 - SEE DWG FOR LOCATION.

B. PROGRAM PRIOR TO INSTALLATION. (NONE RELEASED)

OPTION 6	SIZE A	CODE IDENT 98438	129543 REV
TITLE ALTERNATE CHAR GEN			
SHEET 1 OF 1	SCALE		SHEET 7

ITEM NO.	QTY REQD				PARTS LIST			
					PART NUMBER	DESCRIPTION	LOCATION/REF DES	NOTES
1				2	2N2907	TRANSISTOR		
2				1	2N5550	TRANSISTOR		
3				1	1N5248B	DIODE 18V ±5%		
4				2	1N914	DIODE		
5				1	129518-103	CAP .01 UF		
6				1	129518-472	CAP 4700 PF		
7				1	128533-100	RES, 10		
8				1	-102	1K		
9				2	-103	10K		
10				4	-222	2.2K		
11				1	-332	3.3K		
12				2	-472	4.7K		
13				1	-822	8.2K		

OPTION 7	SIZE A	CODE IDENT 98438	129543 REV
TITLE DIRECT CONNECT			
SHEET 1 OF 1	SCALE		SHEET 8

FIND NO.	QTY REQD					PARTS LIST			
						PART NUMBER	DESCRIPTION	LOCATION/REF DES	NOTES
1									
2									
3					1	129857-11	POWER SUPPLY		
4					1	129868-11	CABLE		
5					1	129497-29	NAMEPLATE		
6					1	129497-35	"		
7					1	129497-37	"		
8					1	3130.75	FUSE	LITTELFUSE	
9									
10									
11									
12									
13									

A. PARTS INSTALL PER 129850 REPLACING:
129857-1, 129868-1, 129497-33,
129497-45, 31301.5
RETURN TO STOCK

VOID REPLACED BY 129850-11 ASSY

OPTION 10	SIZE A	CODE IDENT 98438	129543	REV
TITLE 230 V POWER				
SHEET	SCALE		SHEET 9	

ITEM NO.	QTY REQD				PARTS LIST			
					PART NUMBER	DESCRIPTION	LOCATION/REF DES	NOTES
1				✓	20	CABLE, RS-232-CURRENT LOOP		
2			✓		-22	CABLE PRINTER		
3		✓			-24	CABLE, COMPOSITE VIDEO		
4								
5								
6				1	129316-21	CABLE, RS-232		
7								
8			1		129949-1	CABLE, PRINTER		
9								
10		1			(NOT DEFINED)	CABLE		
11								
12								
13								

OPTION 20-22-24	SIZE A	CODE IDENT 98438	129543	REV
TITLE OPTIONAL CABLES				
SHEET	SCALE		SHEET 10	

REVISIONS				
SHT	ZONE	LTR	DESCRIPTION	DATE
		A	SHTS 3 REDRAWN INC. ADCN 1. ADD .01 CAP, ADD EYELETS 10,11,12,13,14,15 ZS 5979	
		B	INCORP. ADCN 2&3 CREATES -11 ASSY FOR -9 BD. SHTS 1,2,3 ARE ADC S-73 2&3	

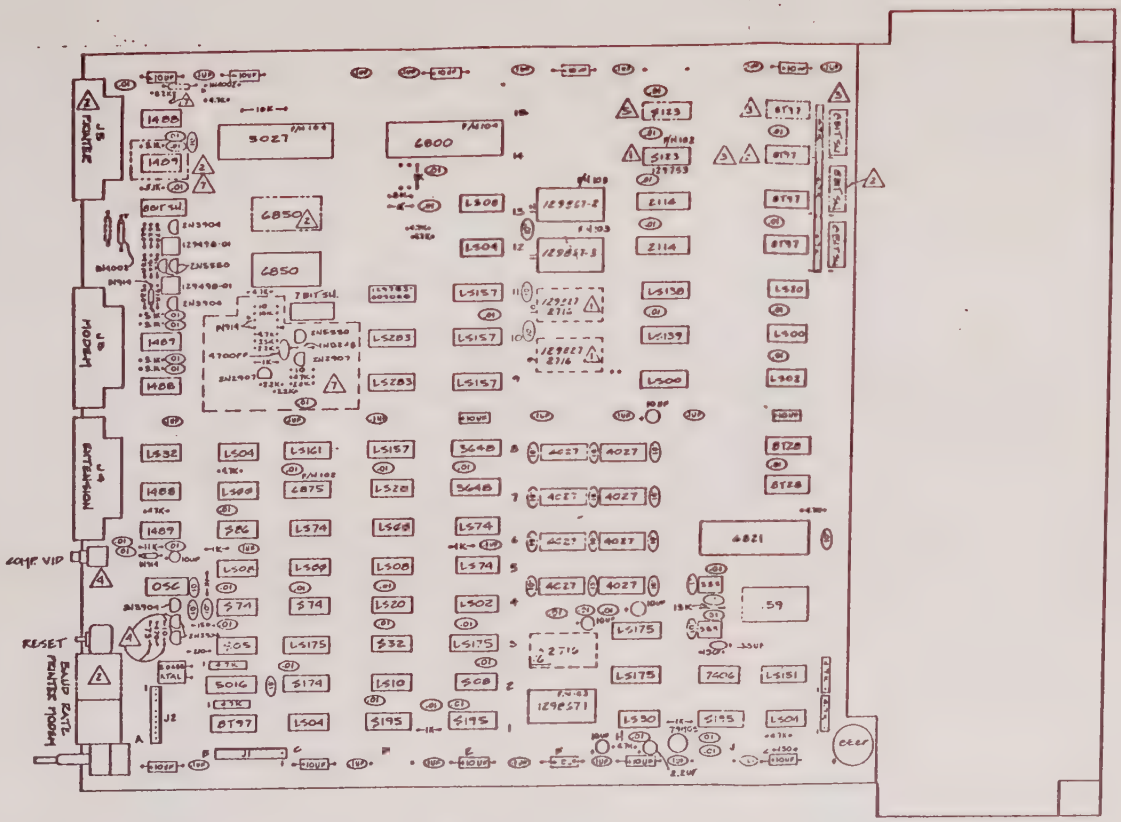

NOTES:

1. FOR OPTIONS & PROM PART NO'S SEE 129843
2. PRINTING OPTION
3. POLLING
4. VIDEO
5. ANSWER BACK
6. ALTERNATE CHARACTER GEN
7. DIRECT CONNECT
10. FOR SCHEMATIC SEE 129871

-11 ASSY. (-9BD)

FOR PARTS LIST SEE PL 129870

DASH NO.	NEXT ASSY	USED ON
-11		

APPLICATION

UNLESS OTHERWISE SPECIFIED DIM. IN INCHES TOLERANCES .X ± .1 .XX ± .03 .XXX ± .010 ANGLES ± 0.5° MACH FIN

LEAR SIEGLER, INC.
ELECTRONIC INSTRUMENTATION DIVISION

PC BOARD ASSY.
ADM 31

SIZE	CODE IDENT NO	DWG NO
D	98438	129870

SCALE | SHEET 1 OF 5

ZONE	LTR	REVISIONS DESCRIPTION	DATE
	A	SHT 3 REDRAWN INC. ALL 1, ADD .01 CAP, ADD EYELETS 10,11,12,13,14,15 RS. 3-9-79	

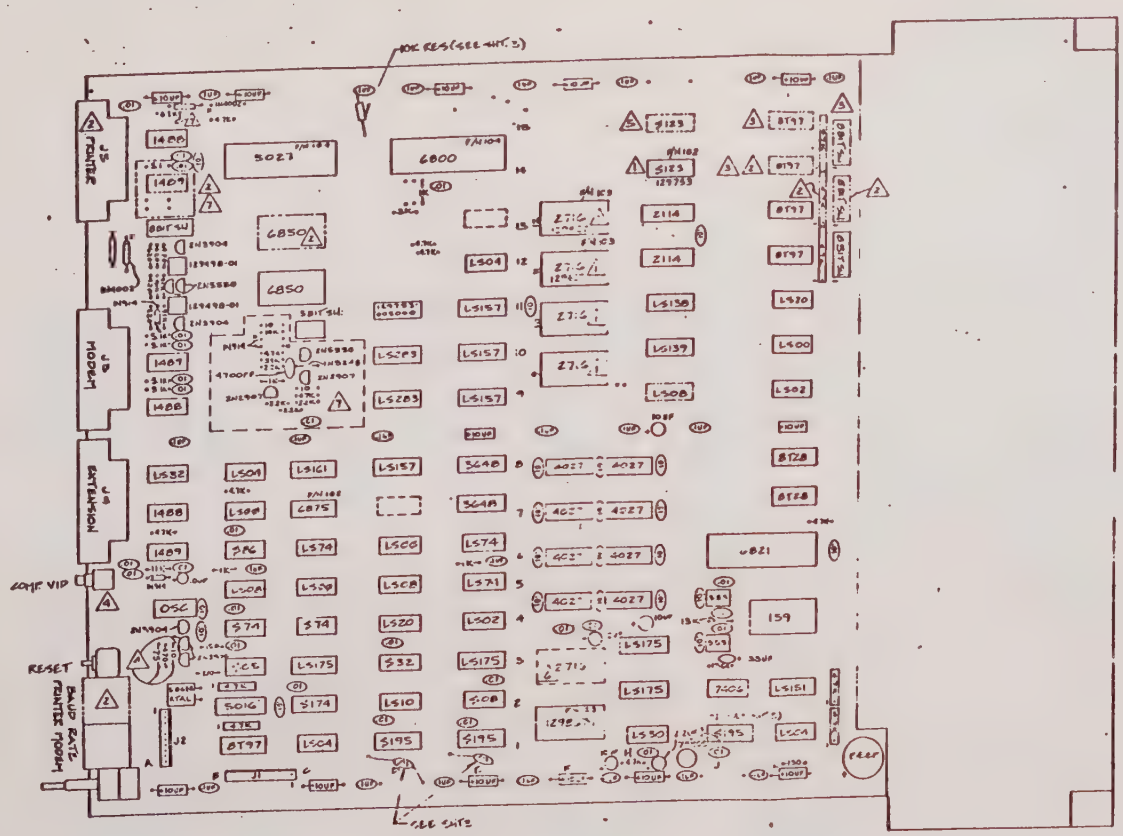
10K RES (SEE SHT. 3)
J5 PRINTER
J3 MODEM
J4 EXTENSION
COMP VID
RESET
BAUD RATE PRINTER PORT
5027
6800
6850
6850
1488
1489
1488
1489
1488
1489
LS32
LS04
LS161
LS157
LS283
LS283
LS157
LS157
LS157
LS283
LS157
LS04
LS08
LS74
LS08
LS20
LS02
LS175
LS10
LS04
LS08
LS74
LS08
LS08
LS74
LS71
LS02
LS32
LS08
LS195
LS195
LS195
LS04
LS04
LS151
LS175
LS175
LS175
LS30
LS04
LS08
LS20
LS08
LS74
LS174
LS04
LS00
LS00
LS00

REVISIONS

LTR	SHEET	DESCRIPTION	DATE	APPROVED
A		INCORPORATED ADCN 1-4 S. FIGUEROA 4-2-79	4/3/79 4/4/79	RD Pollo[illegible] L. [illegible]

△1 EPROM 129827-002012 MAY BE USED INTERCHANGEABLY WITH 129867-2.

△2 EPROM 129827-002011 MAY BE USED INTERCHANGEABLY WITH 129867-3.

DASH NO.	NEXT ASSY	USED ON
-11	129850	
-1	129850	DL12985[illegible]

APPLICATION

UNLESS OTHERWISE SPECIFIED
DIM. IN INCHES
TOLERANCES
.X ± .1
.XX ± .03
.XXX ± .010
ANGLES ± 0.5°
MACH. FIN.
√

DR W. Kelly 12-19-79
CHK
DSGN
ENGR
PROJ [illegible] 2/9/79
REL [illegible] 2/13/79
CUSTOMER APPD

LEAR SIEGLER, INC.
ELECTRONIC INSTRUMENTATION DIV.
ANAHEIM, CALIF

P.C. BOARD ASSY
ADM 31

SIZE A | CODE IDENT 98436 | PL129870 | RE[illegible]

SCALE | SHEET 1 OF 6

FORM 10-1038

FIND NO.	QTY REQD		-11	-1	STOCK NO.	PART OR IDENTIFYING NO.	NOMENCLATURE OR DESCRIPTION	REMARKS
1				✓		-1	P.C. BOARD ASSY	
2			✓			-11	P.C. BOARD ASSY	
3								
4								
5			REF	REF		129871	SCHEMATIC	
6				1		-3	PRINTED WIRING BOARD	
7			1			-7	PRINTED WIRING BOARD	
8			1	1		129762-3	OSCILLATOR	
9			1	1		129851-1	KEYBOARD SET	
10			1	1		800A-5.0688 MHz	CRYSTAL	STANDARD CRYSTAL OR EQUIV
11			4	4		129473-3	JACK SOCKET	
12			1	1		DQ7432	POT, 500/100	CTS
13			2	2		206584-1	CONN, 25 PIN	AMP
14			1	1		09-65-1091	CONN, 9 PIN	MOLEX
15			1	1		1-640456-0	CONN, 10 PIN	AMP
16			1	1		39-251-RED	SWITCH	GRAYHILL
17				1		1A216031G	SWITCH	EECO
18			2	2		1-435668-8	SWITCH 8 POS	AMP
19				1		1-435668-5	SWITCH 5 POS	AMP
20			4	4		129476-472	RES MODULE	
21			3	3		785-1-R4.7K	RES MODULE	BECKMAN
22			1			1A216031GF	SWITCH	EECO
23			1			1-435668-6	SWITCH	AMP
24			1	1		5082-4658	LED	HEWLETT PACKARD
25			1	1		AI-254	AUDIO INDICATOR	PROJECTS UNLIMITED

SIZE A
FSCM NO. 98433
SH 2
DL 129870
REV A

FIND NO.	QTY REQD				STOCK NO.	PART OR IDENTIFYING NO.	NOMENCLATURE OR DESCRIPTION	REMARKS
			-11	-1				
26			4	4		129467-00	LS TYPE	
27			2	2		-02		
28			4	4		-04		
29			3	2		-08		
30			1	1		-10		
31			3	2		-20		
32			1	1		-30		
33			1	1		-32		
34			3	3		-74		
35			1	1		-138		
36			1	1		-139		
37			1	1		-151		
38			4	4		-157		
39			1	1		-161		
40			4	4		-175		
41			2	2		-283		
42								
43			1	1		129826-05	S TYPE	
44			1	1		-08		
45			1	1		-32		
46			2	2		-74		
47			1	1		-86		
48			1	1		-174		
49			3	3		-195		
50								

SIZE A
FSCM NO. 98438
PL129870
SH 3
REV A

FIND NO.	QTY REQD		-11	-1	STOCK NO.	PART OR IDENTIFYING NO.	NOMENCLATURE OR DESCRIPTION	REMARKS
51			1	1		128348-06		
52			1	1		-159		
53			3	3		-1488		
54			2	2		-1489		
55			2	2		-3648		
56			1	1		-5016		
57			1	1		-5027		
58			2	2		-8T28		
59			3	3		-8T97		
60			2	2		-555		
61			1	1		-79M05		
62								
63			1	1		129824-6800		
64			1	1		-6821		
65			1	1		-6850		
66			1	1		-6875		
67								
68			8	8		129466-4027		
69			2	2		-2114		
70			1	1		129867-2	ROM 1	1
71			1	1		129867-3	ROM 2	2
72			1	1		129753-00	PROM 82S123, PERSONALITY	
73			1	1		129753-005000	PROM. ADDR. TRANS	
74			1	1		129867-1	CHAR GEN	
75			2	2		129498-01	OPT ISOLATOR	

SIZE A FSCM NO. 98438

SH PL129870

REV

FIND NO.	QTY REQD		-11	-1	STOCK NO.	PART OR IDENTIFYING NO.	NOMENCLATURE OR DESCRIPTION	REMARKS
76			66	45		128518-103	CAP .01 UF	
77			22	22		129329-104	.1 UF	
78			13	13		129469-106	10 UF	
79			5	5		128518-106	10 UF	
80			1	1		128518-334	.33 UF	
81			1	1		128518-225	2.2 UF	
82								
83			2	2		128533-151	RES 150	
84			2	2		-221	220	
85			2	2		-471	470	
86			2	2		-621	620	
87			7	3		-102	1K	
88			1	1		-302	3K	
89			9	7		-472	4.7K	
90			4	4		-512	5.1K	
91			1	1		-113	11K	
92			1	1		-133	13K	
93			3	3		-913	91K	
94			1	1		-154	150K	
95			1			-103	10K	
96			2	2		1N4002	DIODE	
97			2	2		1N914	DIODE	
98			3	3		2N3904	TRANSISTOR	
99			2	2		2N5550	TRANSISTOR	
100			1	1		7717-5DAP	INSULATOR, TO-5	THERMALLOY

SIZE A
FSCM NO. 98438
SH 5
PL 129370
REV 14

FIND NO.	QTY REQD		-11	-1	STOCK NO.	PART OR IDENTIFYING NO.	NOMENCLATURE OR DESCRIPTION	REMARKS
101								
102			2	2		640358-3	SOCKET 16 PIN	AMP
103			3	3		640361-3	SOCKET 24 PIN	AMP
104			2	2		640379-3	SOCKET 40 PIN	AMP
105								
106								
107								
108								
109								
110								
111								
112								
113								
114								
115								
116								
117								
118								
119								
120								
121								
122								
123								
124								
125								

SIZE A
FSCM NO. 98438
PL 1298870
SH 2
REV A

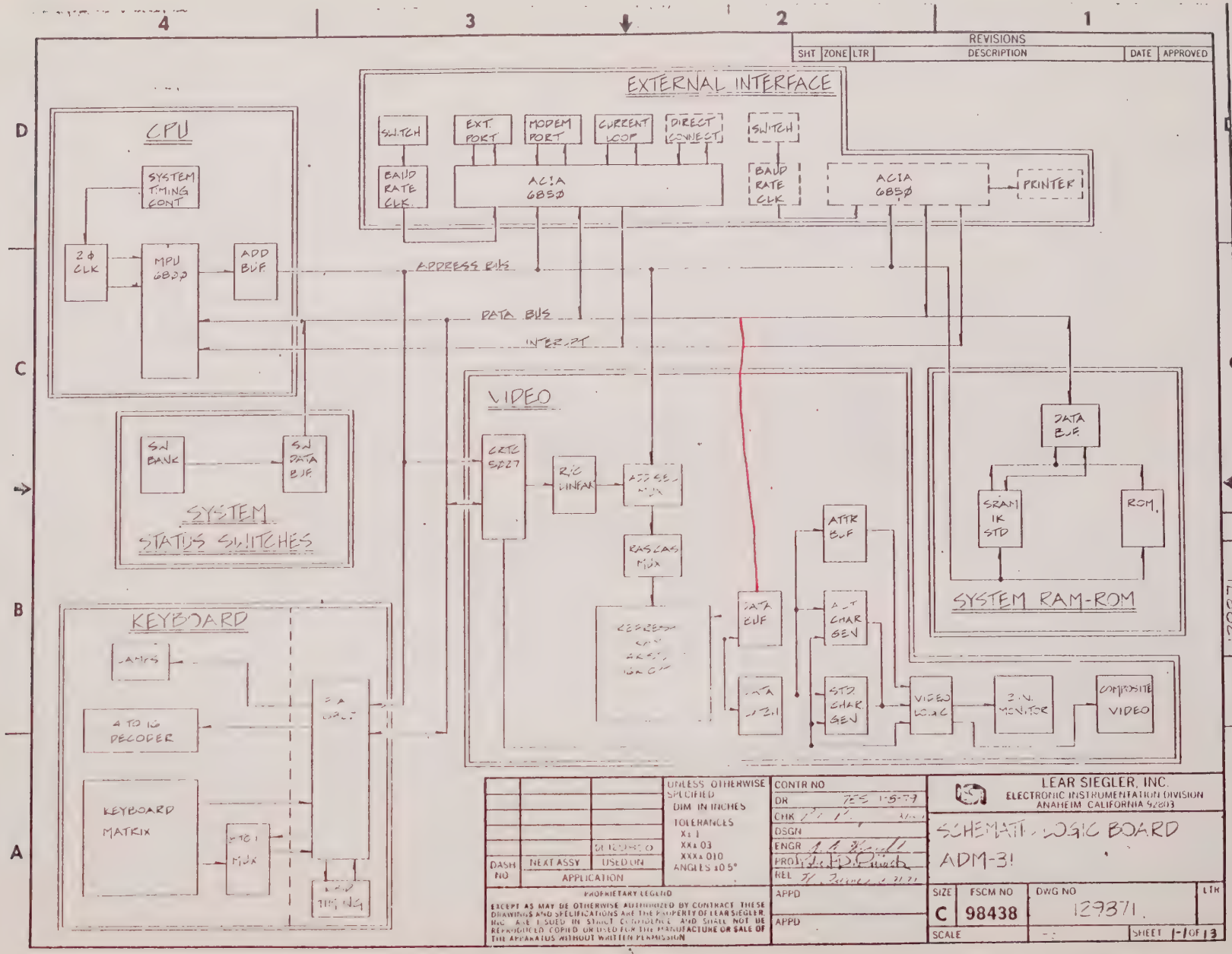
REVISIONS
SHT ZONE LTR DESCRIPTION DATE APPROVED
EXTERNAL INTERFACE
SWITCH
EXT PORT
MODEM PORT
CURRENT LOOP
DIRECT CONNECT
SWITCH
BAUD RATE CLK
ACIA 6850
BAUD RATE CLK
ACIA 6850
PRINTER
CPU
SYSTEM TIMING CONT
2 Φ CLK
MPU 6800
ADD BUF
ADDRESS BUS
DATA BUS
INTERRUPT
VIDEO
CRTC 5027
R/C LINEAR
ADDRESS MUX
RAS/CAS MUX
DATA BUF
ATTR BUF
ALT CHAR GEN
STD CHAR GEN
VIDEO LOGIC
B.W. MONITOR
COMPOSITE VIDEO
SYSTEM RAM-ROM
DATA BUF
SRAM 1K STD
ROM
SW BANK
SW DATA BUF
SYSTEM STATUS SWITCHES
KEYBOARD
LAMPS
4 TO 16 DECODER
KEYBOARD MATRIX
8 TO 1 MUX
UNLESS OTHERWISE SPECIFIED
DIM IN INCHES
TOLERANCES
X± 1
XX± 03
XXX± 010
ANGLES ±0.5°
DASH NO
NEXT ASSY
USED ON
APPLICATION
PROPRIETARY LEGEND
EXCEPT AS MAY BE OTHERWISE AUTHORIZED BY CONTRACT THESE DRAWINGS AND SPECIFICATIONS ARE THE PROPERTY OF LEAR SIEGLER, INC. ARE ISSUED IN STRICT CONFIDENCE AND SHALL NOT BE REPRODUCED COPIED OR USED FOR THE MANUFACTURE OR SALE OF THE APPARATUS WITHOUT WRITTEN PERMISSION
CONTR NO
DR
CHK
DSGN
ENGR
PROJ
REL
APPD
APPD
LEAR SIEGLER, INC.
ELECTRONIC INSTRUMENTATION DIVISION
ANAHEIM CALIFORNIA 92803
SCHEMATIC LOGIC BOARD
ADM-31
SIZE C
FSCM NO 98438
DWG NO 129371
LTR
SCALE
SHEET 1 OF 13

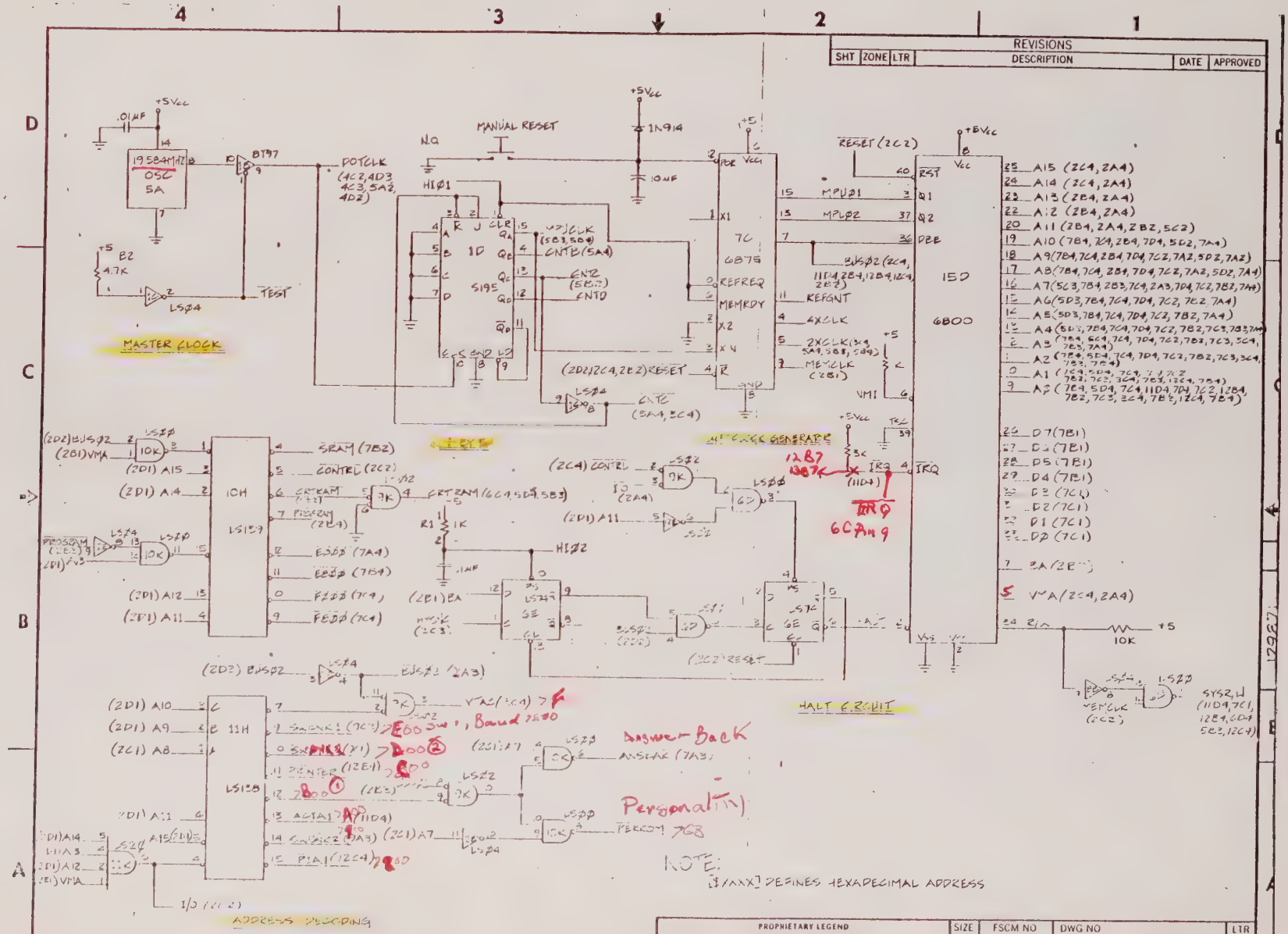

(2)

(1) Personality when True Answer Back when False

(2) Switch Bank 3 is Polling

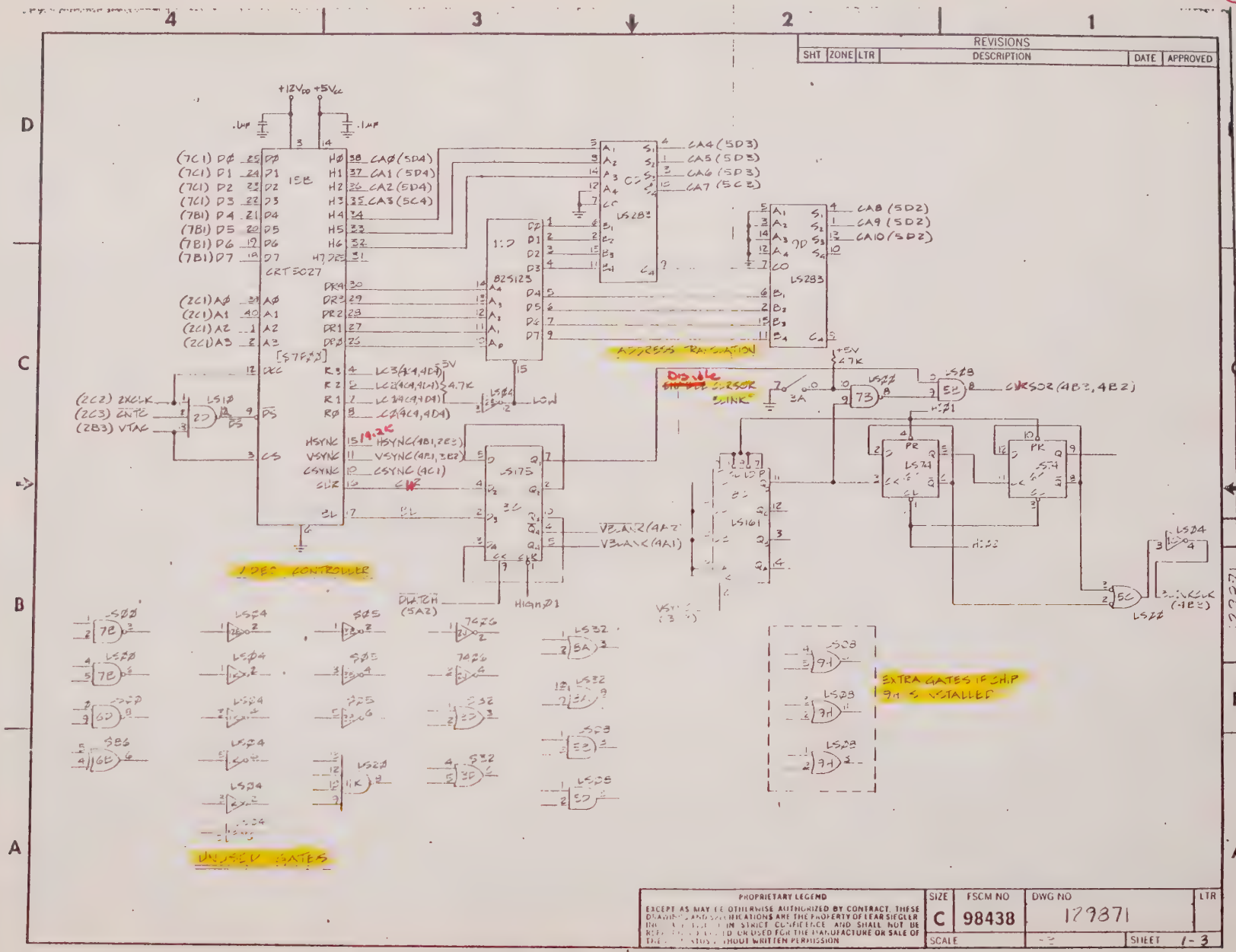
REVISIONS
SHT ZONE LTR DESCRIPTION DATE APPROVED
+12VDD +5VCC
.1µF
.1µF
15B
CRT5027
(7C1) D0 D1 D2 D3 D4 D5 D6 D7
(7B1) D4 D5 D6 D7
(2C1) A0 A1 A2 A3
(2C2) 2XCLK
(2C3) CNTC
(2B3) VTAC
HSYNC
VSYNC
CSYNC
CUR
CA4 (5D3)
CA5 (5D3)
CA6 (5D3)
CA7 (5C3)
CA8 (5D2)
CA9 (5D2)
CA10 (5D2)
LS283
82S123
ADDRESS TRANSLATION
LS175
LS161
LS74
LS20
LS32
LS08
LS04
LS10
LOW
HIGH
LATCH (5A2)
VBLANK (4A2)
VBLANK (4A1)
CURSOR (4B3, 4B2)
Disable CURSOR BLINK
VIDEO CONTROLLER
UNUSED GATES
EXTRA GATES IF CHIP 9H IS INSTALLED
PROPRIETARY LEGEND
EXCEPT AS MAY BE OTHERWISE AUTHORIZED BY CONTRACT, THESE DRAWINGS AND SPECIFICATIONS ARE THE PROPERTY OF LEAR SIEGLER INC. [illegible] IN STRICT CONFIDENCE AND SHALL NOT BE REPRODUCED OR USED FOR THE MANUFACTURE OR SALE OF THE [illegible] WITHOUT WRITTEN PERMISSION
SIZE C
FSCM NO 98438
DWG NO 129871
LTR
SCALE
SHEET 1-3

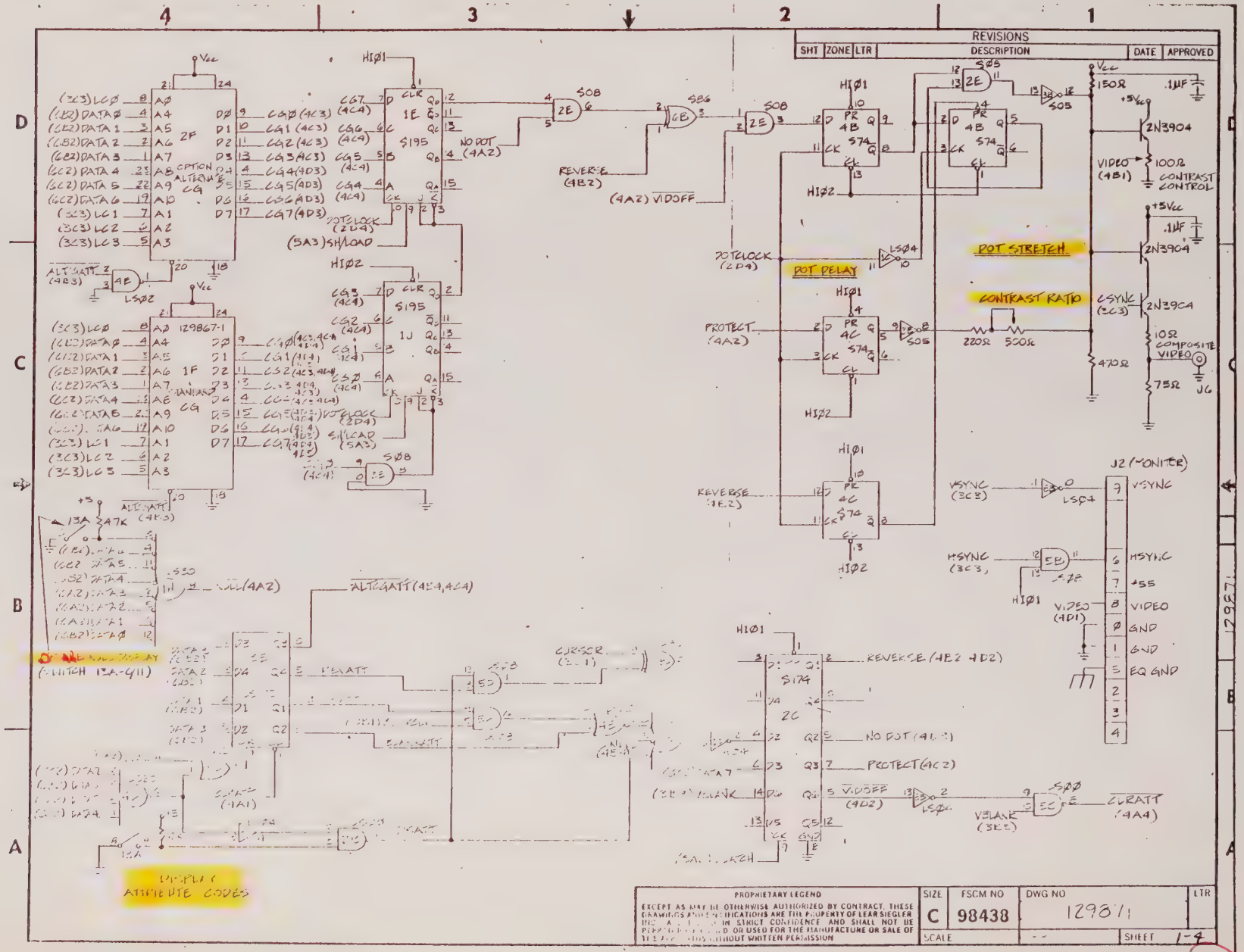
REVISIONS
SHT ZONE LTR DESCRIPTION DATE APPROVED
2F
1F
CG
OPTION ALTERNATE
129867-1
S195
S174
2E
2C
4B
4C
S74
S08
S06
S05
S04
S00
S30
S32
S33
S34
S35
S37
S38
S39
S40
S41
S42
S43
S44
S45
S46
S47
S48
S49
S50
S51
S52
S53
S54
S55
S56
S57
S58
S59
S60
S61
S62
S63
S64
S65
S66
S67
S68
S69
S70
S71
S72
S73
S74
S75
S76

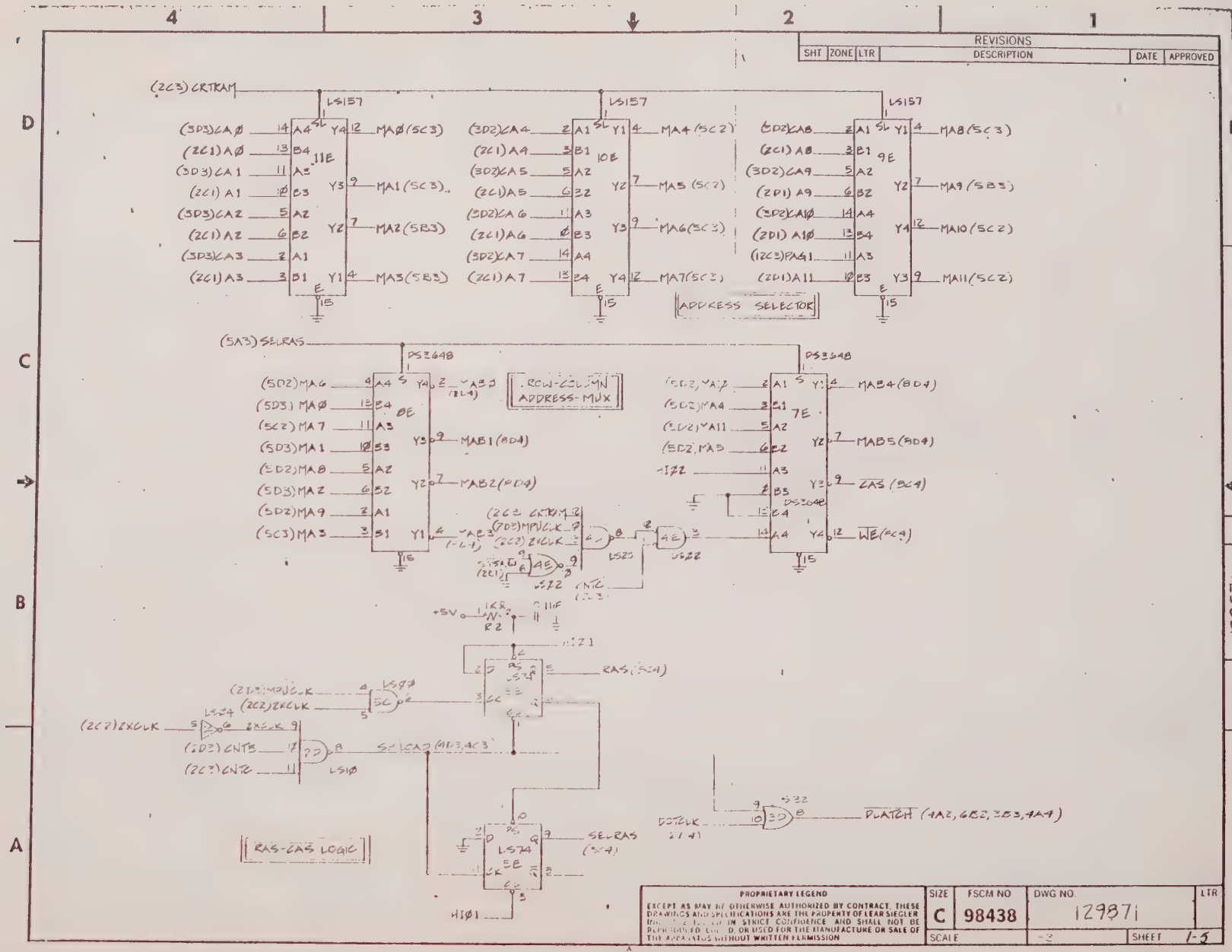
REVISIONS
SHT ZONE LTR DESCRIPTION DATE APPROVED
(2C3) CRTRAM
LS157
11E
10E
9E
ADDRESS SELECTOR
(5A3) SELRAS
DS3648
8E
7E
ROW-COLUMN ADDRESS-MUX
RAS-CAS LOGIC
LS74
5E
PLATCH (4A2, 6B2, 3B3, 4A4)
SELRAS (5C4)
HI01
PROPRIETARY LEGEND
EXCEPT AS MAY BE OTHERWISE AUTHORIZED BY CONTRACT, THESE DRAWINGS AND SPECIFICATIONS ARE THE PROPERTY OF LEAR SIEGLER INC. ... IN STRICT CONFIDENCE AND SHALL NOT BE REPRODUCED, COPIED, OR USED FOR THE MANUFACTURE OR SALE OF THE APPARATUS WITHOUT WRITTEN PERMISSION
SIZE C
FSCM NO 98438
DWG NO. 129871
LTR
SCALE
SHEET 1-5

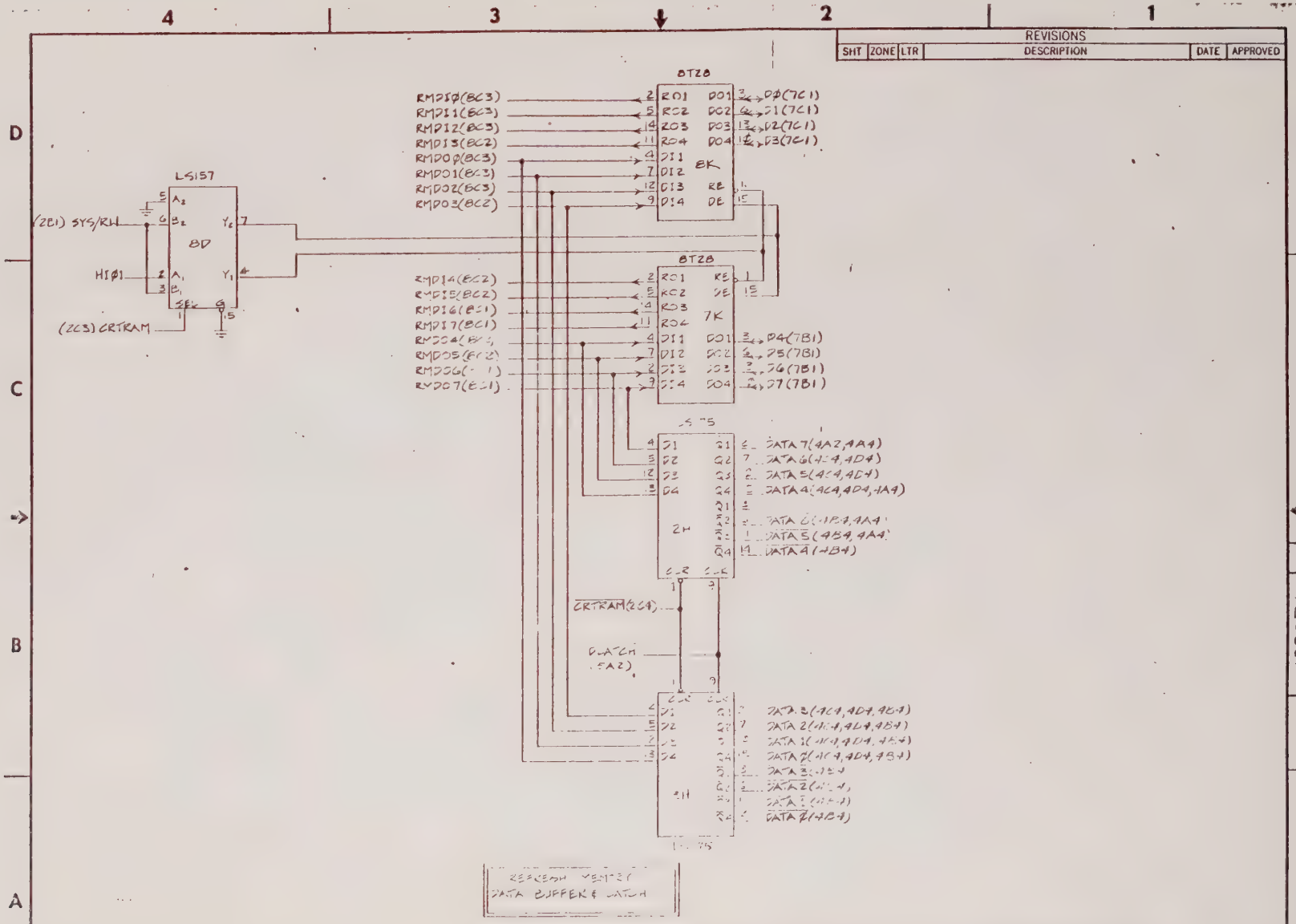
REVISIONS
SHT ZONE LTR DESCRIPTION DATE APPROVED
BT28
RMDI0(8C3)
RMDI1(8C3)
RMDI2(8C3)
RMDI3(8C2)
RMDO0(8C3)
RMDO1(8C3)
RMDO2(8C3)
RMDO3(8C2)
RO1 RO2 RO3 RO4 DI1 DI2 DI3 DI4 DO1 DO2 DO3 DO4 RE DE
8K
D0(7C1)
D1(7C1)
D2(7C1)
D3(7C1)
LS157
(2B1) SYS/RH
HI01
(2C3) CRTRAM
A2 B2 A1 B1 SEL Y2 Y1
8D
BT28
RMDI4(8C2)
RMDI5(8C2)
RMDI6(8C1)
RMDI7(8C1)
RMDO4(8C2)
RMDO5(8C2)
RMDO6(8C1)
RMDO7(8C1)
7K
D4(7B1)
D5(7B1)
D6(7B1)
D7(7B1)
LS175
D1 D2 D3 D4 Q1 Q2 Q3 Q4 CLR CLK
2H
DATA 7(4A2,4A4)
DATA 6(4C4,4D4)
DATA 5(4C4,4D4)
DATA 4(4C4,4D4,4A4)
DATA 3(4B4,4A4)
DATA 2(4B4,4A4)
DATA 1(4B4)
CRTRAM(2C4)
LATCH (5A2)
DATA 3(4C4,4D4,4B4)
DATA 2(4C4,4D4,4B4)
DATA 1(4C4,4D4,4B4)
DATA 0(4C4,4D4,4B4)
DATA 3(4B4)
DATA 2(4B4)
DATA 1(4B4)
DATA 0(4B4)
2H
REFRESH MEMORY
DATA BUFFER & LATCH
PROPRIETARY LEGEND
EXCEPT AS MAY BE OTHERWISE AUTHORIZED BY CONTRACT THESE DRAWINGS AND SPECIFICATIONS ARE THE PROPERTY OF LEAR SIEGLER INC. ARE ISSUED IN STRICT CONFIDENCE AND SHALL NOT BE REPRODUCED COPIED OR USED FOR THE MANUFACTURE OR SALE OF THE EQUIPMENT WITHOUT WRITTEN PERMISSION
SIZE C
FSCM NO 98438
DWG NO 129371
LTR
SCALE
SHEET 1-6
129371

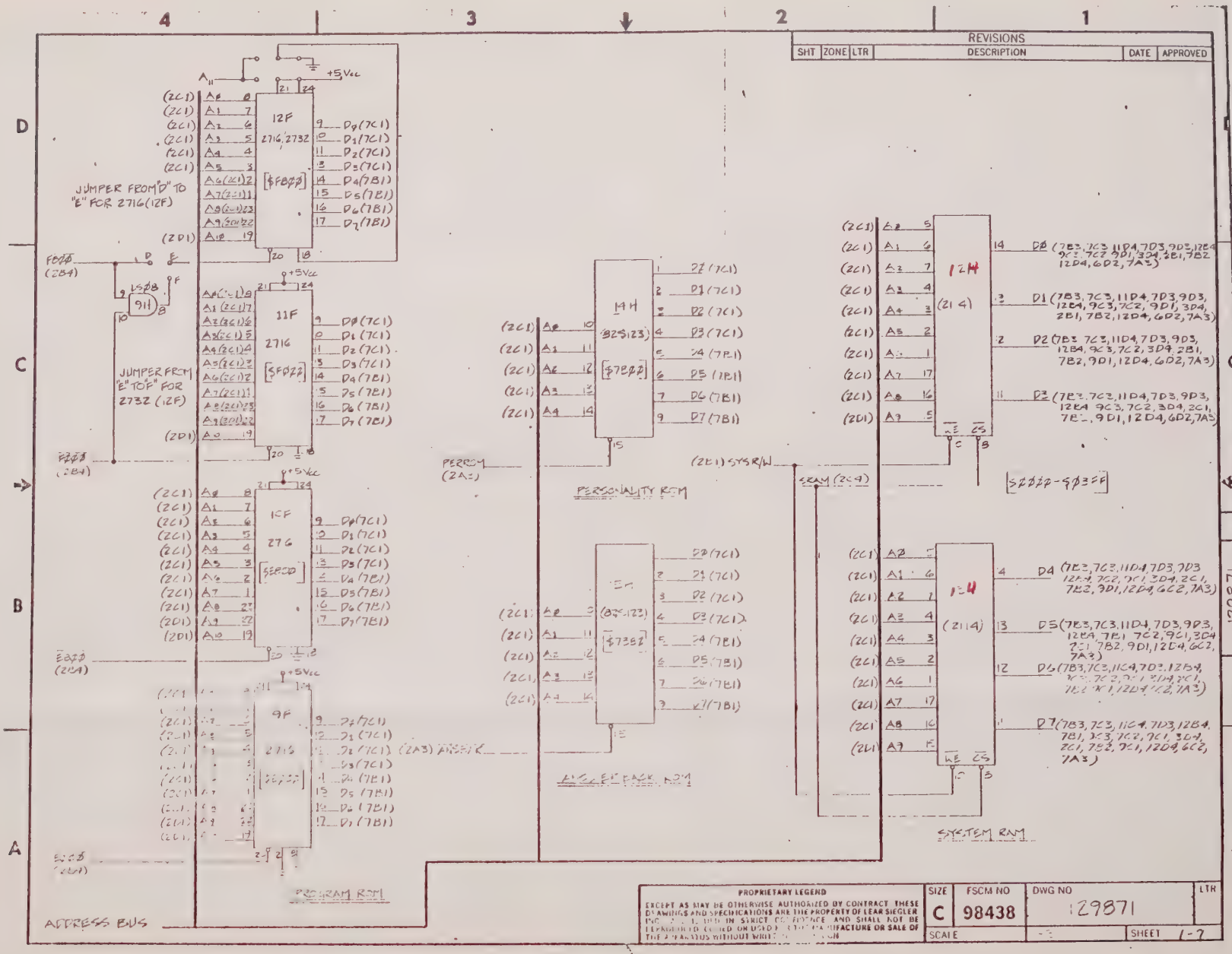
REVISIONS
SHT ZONE LTR DESCRIPTION DATE APPROVED
JUMPER FROM "D" TO "E" FOR 2716 (12F)
JUMPER FROM "E" TO "F" FOR 2732 (12F)
12F 2716, 2732 [$F800]
11F 2716 [$F000]
10F 2716 [$E800]
9F 2716 [$E000]
PROGRAM ROM
ADDRESS BUS
14H (82S123) [$7800]
PERSONALITY ROM
PERROM (2A3)
(2B1) SYSR/W
SRAM (2C4)
12H (2114)
SYSTEM RAM
$0000-$03FF
129871
PROPRIETARY LEGEND
EXCEPT AS MAY BE OTHERWISE AUTHORIZED BY CONTRACT THESE DRAWINGS AND SPECIFICATIONS ARE THE PROPERTY OF LEAR SIEGLER INC. ... USED IN STRICT CONFIDENCE AND SHALL NOT BE REPRODUCED, COPIED OR USED FOR THE MANUFACTURE OR SALE OF THE APPARATUS WITHOUT WRITTEN PERMISSION
SIZE C
FSCM NO 98438
DWG NO 129871
LTR
SCALE
SHEET 1-7

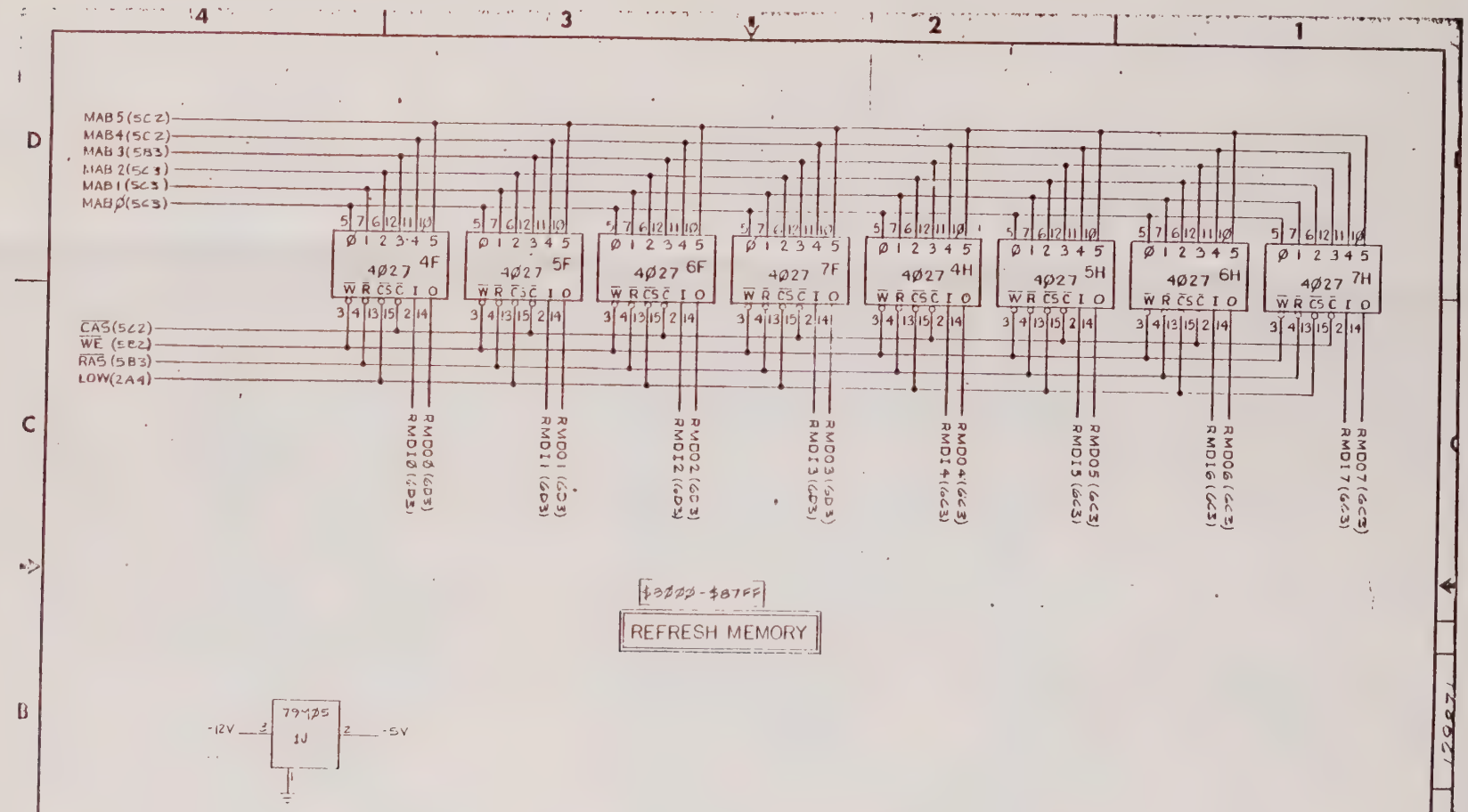

SIZE	CODE IDENT NO	DWG NO.	LTR
C	98438	124871	
SCALE NONE		SHEET 1-8	

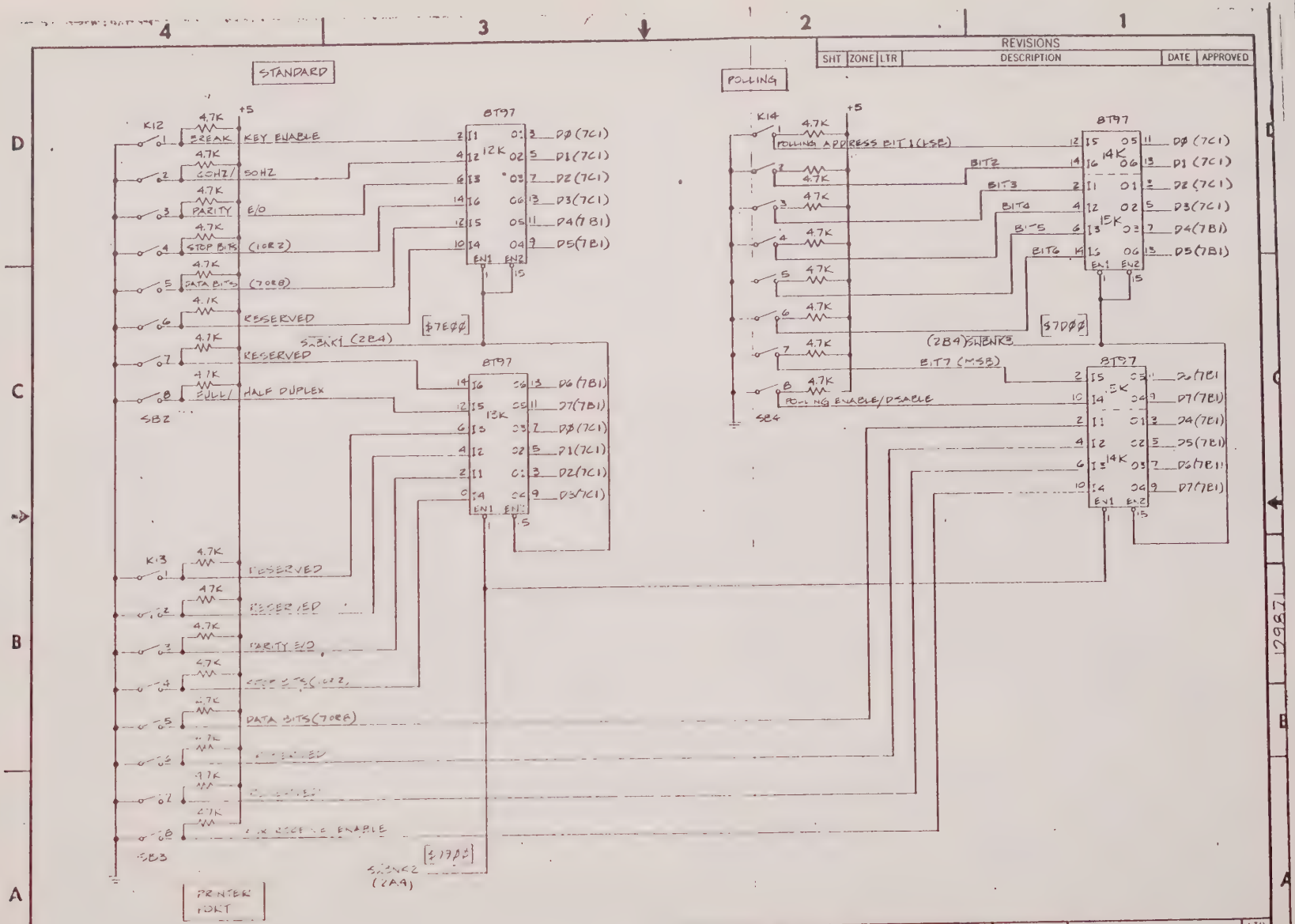
STANDARD
POLLING
PRINTER PORT
K12
K13
K14
SB2
SB3
SB4
+5
4.7K
BREAK
KEY ENABLE
60HZ/
50HZ
PARITY
E/O
STOP BITS
(10B2)
DATA BITS
(7OR8)
RESERVED
SWENK1 (2B4)
HALF DUPLEX
SWENK2 (2A4)
POLLING ADDRESS BIT 1 (LSB)
BIT2
BIT3
BIT4
BIT5
BIT6
BIT7 (MSB)
POLLING ENABLE/DISABLE
8T97
12K
13K
14K
15K
EN1
EN2
D0(7C1)
D1(7C1)
D2(7C1)
D3(7C1)
D4(7B1)
D5(7B1)
D6(7B1)
D7(7B1)
$7E00
$7D00
$7F00
REVISIONS
SHT
ZONE
LTR
DESCRIPTION
DATE
APPROVED
PROPRIETARY LEGEND
EXCEPT AS MAY BE OTHERWISE AUTHORIZED BY CONTRACT, THESE DRAWINGS AND SPECIFICATIONS ARE THE PROPERTY OF LEAR SIEGLER, INC. AND ARE TO BE HELD IN STRICT CONFIDENCE AND SHALL NOT BE REPRODUCED OR USED FOR THE MANUFACTURE OR SALE OF THE EQUIPMENT WITHOUT WRITTEN PERMISSION
SIZE
C
FSCM NO
98438
DWG NO
129871
LTR
SCALE
SHEET
1-9

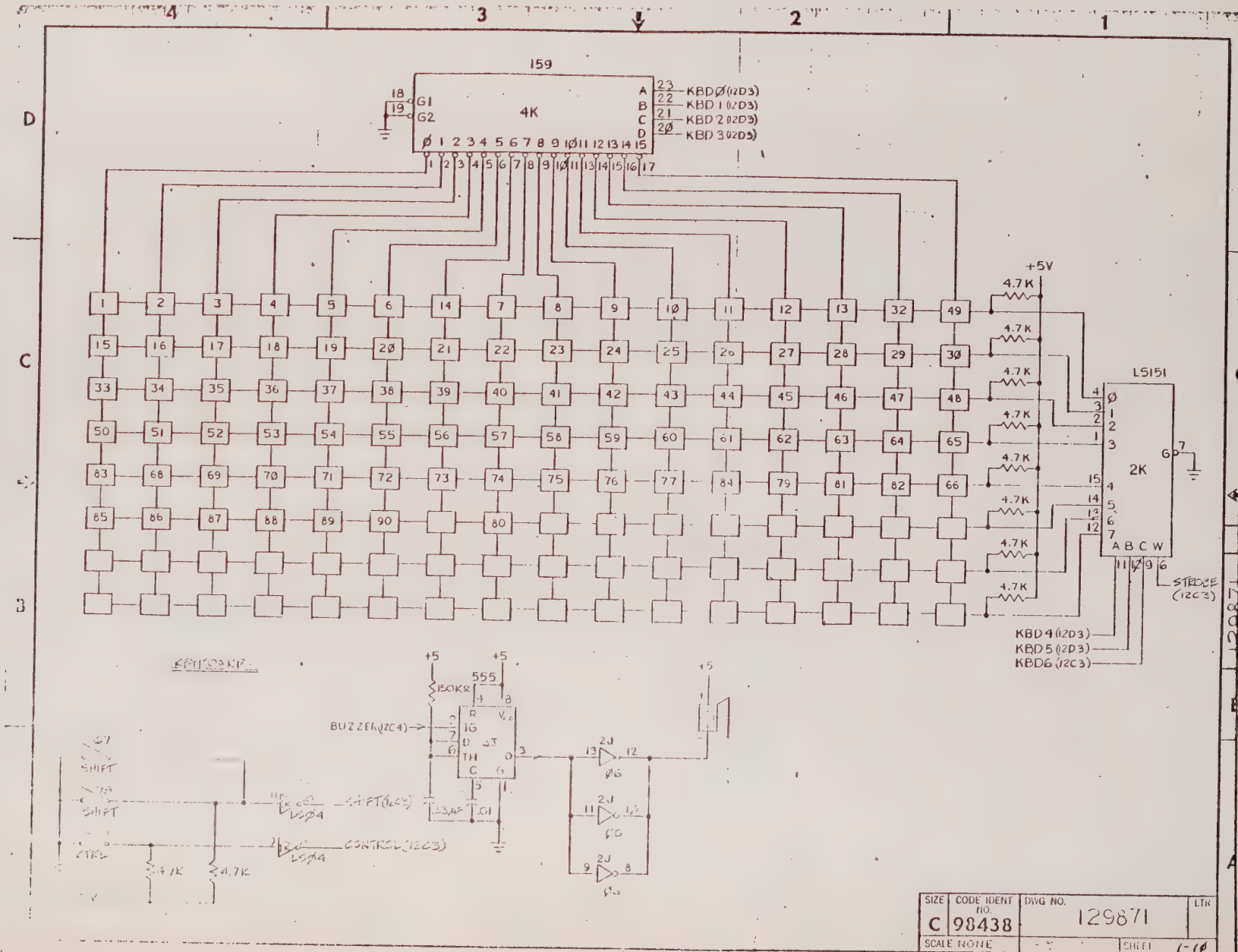

159
4K
G1
G2
A
B
C
D
KBDØ (12D3)
KBD 1 (12D3)
KBD 2 (12D3)
KBD 3 (12D3)
+5V
4.7K
LS151
2K
A B C W
STROBE (12C3)
KBD 4 (12D3)
KBD 5 (12D3)
KBD 6 (12C3)
KEYBOARD
555
150KΩ
BUZZER (12C4)
SHIFT
CTRL
LSØ4
SHIFT (12C3)
CONTROL (12C3)
SIZE
C
CODE IDENT NO.
98438
DWG NO.
129871
LTR
SCALE NONE
SHEET
1-10

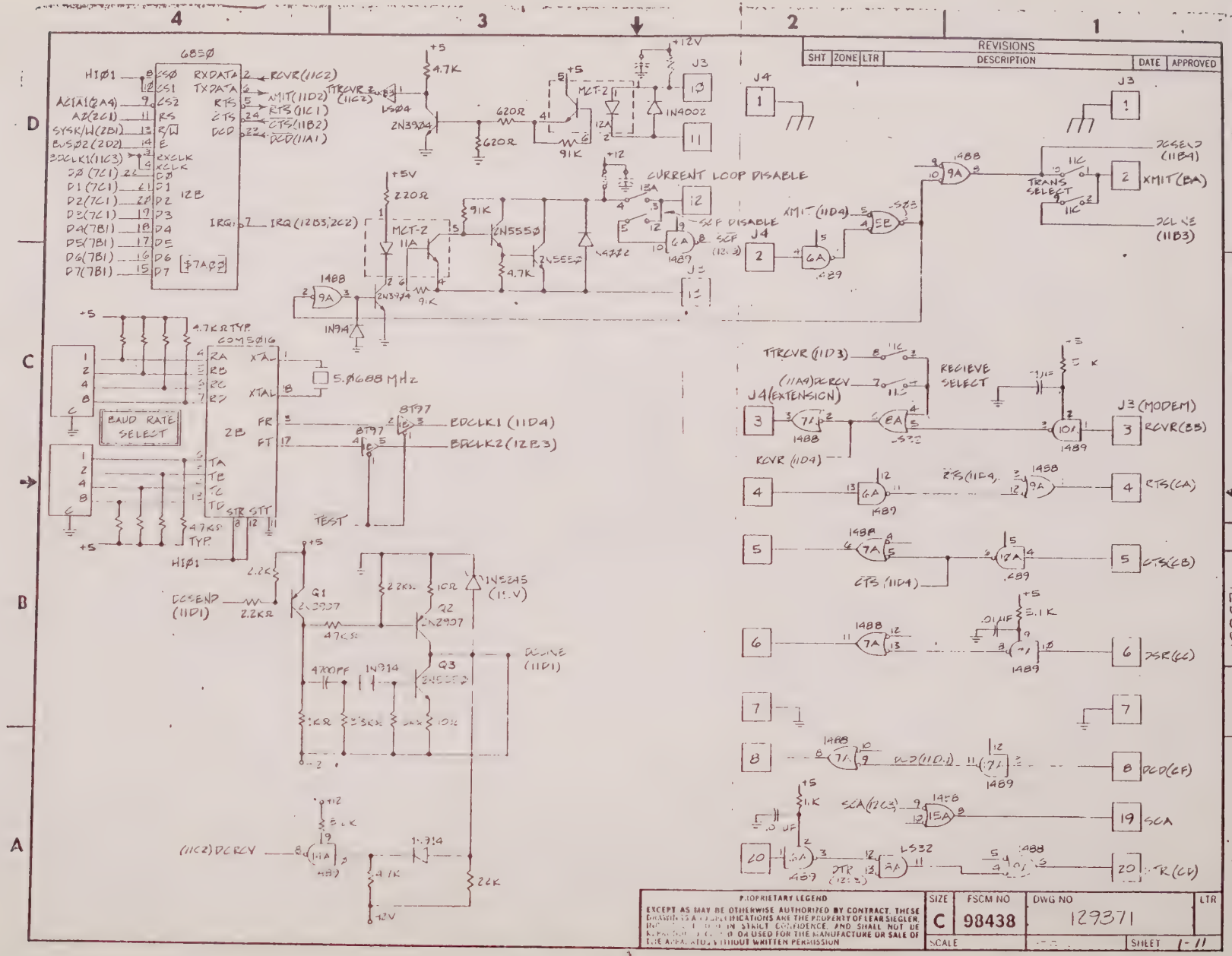
REVISIONS
SHT ZONE LTR DESCRIPTION DATE APPROVED
6850
12B
CURRENT LOOP DISABLE
SCF DISABLE
TRANS SELECT
XMIT(BA)
BAUD RATE SELECT
COM5016
5.0688 MHz
BDCLK1 (11D4)
BDCLK2 (12B3)
TEST
RECIEVE SELECT
J4 (EXTENSION)
J3 (MODEM)
RCVR(BB)
RTS(CA)
CTS(CB)
DSR(CC)
DCD(CF)
SCA
DTR(CD)
PROPRIETARY LEGEND
EXCEPT AS MAY BE OTHERWISE AUTHORIZED BY CONTRACT, THESE DRAWINGS AND SPECIFICATIONS ARE THE PROPERTY OF LEAR SIEGLER, INC. IN STRICT CONFIDENCE, AND SHALL NOT BE REPRODUCED OR USED FOR THE MANUFACTURE OR SALE OF THE APPARATUS WITHOUT WRITTEN PERMISSION
SIZE C
FSCM NO 98438
DWG NO 129371
LTR
SCALE
SHEET 1-11

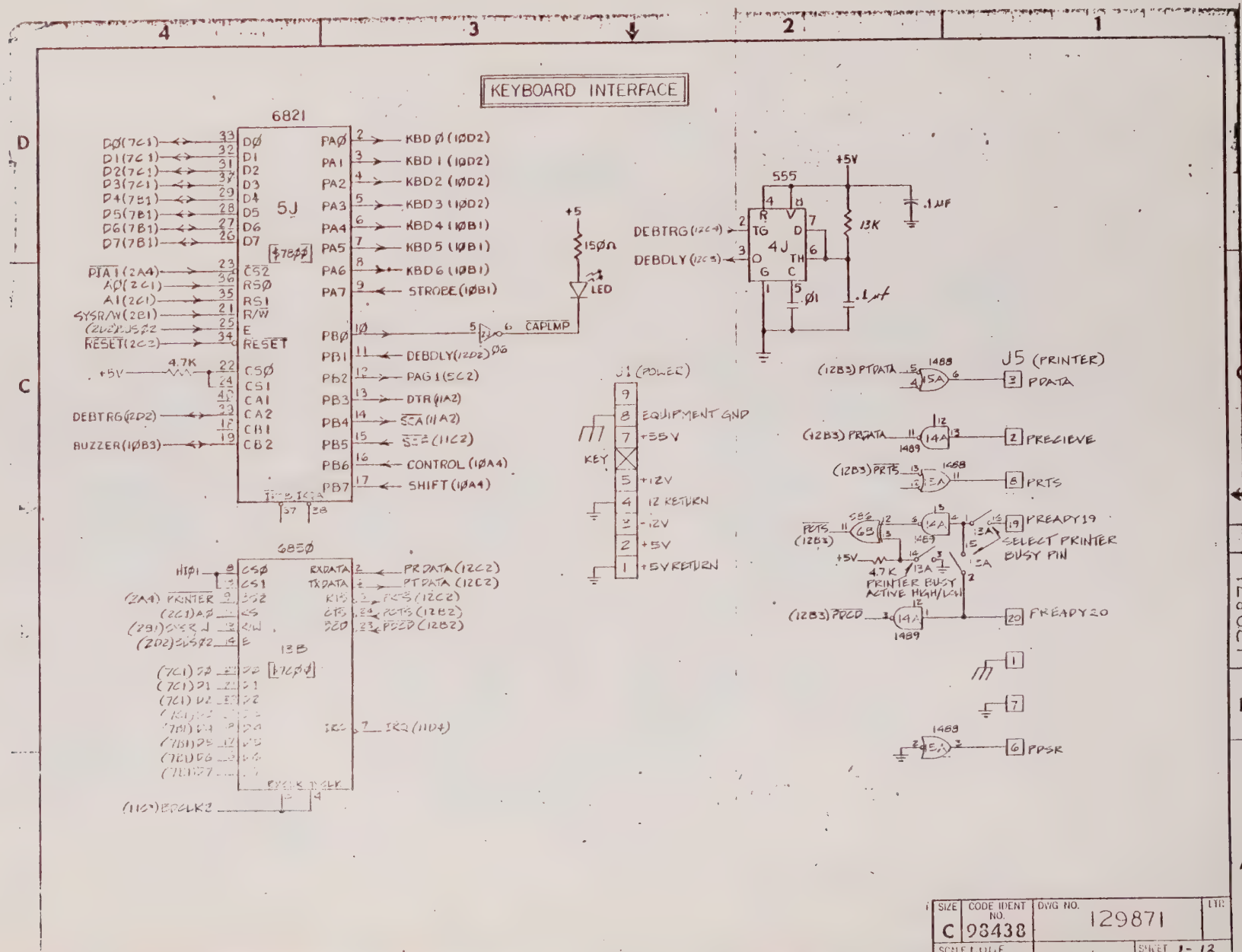

SIZE	CODE IDENT NO.	DWG NO.	LTR
C	98438	129871	
SCALE NONE		SHEET 1-12	

REVISIONS					
SHT	ZONE	LTR	DESCRIPTION	DATE	APPROVED

J1 POWER

PIN NO	FUNCTION	SHEET
1	5V RETURN	12B3
2	+5	12B3
3	-12	12B3
4	12V RETURN	12C3
5	+12	12C3
6	KEY	
7	+5S	12C3
8	EQUIP. GND	12C3
9	N/U	

J2 MONITOR

PIN NO	FUNCTION	SHEET
1	GRD	4B1
2	N/U	"
3	N/U	"
4	N/U	"
5	EQUIP GRD	"
6	HSYNC	"
7	+5S	"
8	VIDEO	"
9	VSYNC	4C1
10	GND	4B1

J3 MODEM

PIN NO	FUNCTION	SHEET
1	EQUIP GRD	12D1
2	XMIT (BA)	"
3	RCVR (BB)	11C1
4	RTS (CA)	"
5	CTS (CB)	11B1
6	DSR (CC)	"
7	GRD	"
8	DCD (CF)	11A1
9	NU	
10	CL IN	11D2
11	CL IN	"
12	CL OUT	"
13	CL OUT	11C2
14	NU	
15		
16		
17		
18	NU	
19	SCA	11A1
20	DTR (CD)	
21	NU	
22		
23		
24		
25	NU	

J4 EXTENSION

PIN NO.	FUNCTION	SHEET
1	EQUIP GRD	11D2
2	XMIT (BA)	11C2
3	RCVR (BA)	"
4	RTS (CA)	"
5	CTS (CB)	11B2
6	DSR (CC)	"
7	GRD	"
8	DCD (CF)	11A2
9	NU	
10		
11		
12		
13		
14		
15		
16		
17		
18		
19	NU	
20	DTR (CD)	11A2
21	NU	
22		
23		
24		
25	NU	

J5 PRINTER

PIN NO.	FUNCTION	SHEET
1	EQUIP. GRD	12B1
2	RCVR (BB)	2C
3	XMIT (BA)	"
4	NU	
5	"	
6	DSR (CC)	2A1
7	GND	12B1
8	NU	
9		
10		
11		
12		
13		
14		
15		
16		
17		
18	NU	
19	BUSY	12C1
20	DCD	12B1
21	NU	
22		
23		
24		
25	NU	

J6

PIN NO.	FUNCTION	SHEET
1	COMPOSITE VIDEO	4C1

PROPRIETARY LEGEND
EXCEPT AS MAY BE OTHERWISE AUTHORIZED BY CONTRACT, THESE DRAWINGS AND SPECIFICATIONS ARE THE PROPERTY OF LEAR SIEGLER INC. AND ISSUED IN STRICT CONFIDENCE AND SHALL NOT BE REPRODUCED COPIED OR USED FOR THE MANUFACTURE OR SALE OF EQUIPMENT OR APPARATUS WITHOUT WRITTEN PERMISSION

SIZE	FSCM NO	DWG NO	LTR
C	98438	129871	
SCALE		-3	SHEET 1-13

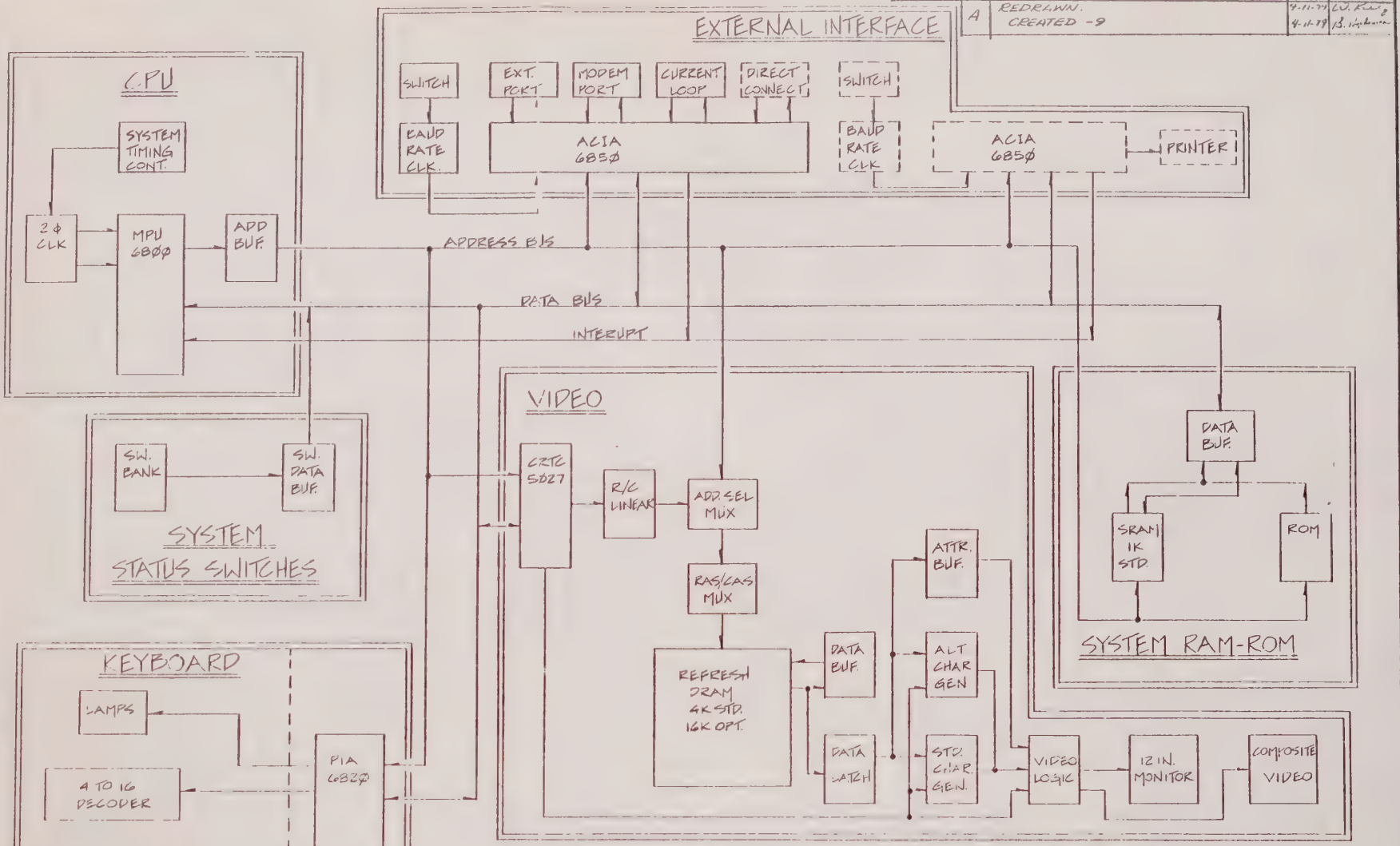

DASH NO.	NEXT ASSY	USED ON
		PI 129350
	APPLICATION	

UNLESS OTHERWISE SPECIFIED:
DIM IN INCHES
TOLERANCES:
X± 1
.XX± 03
.XXX± 010
ANGLES ±0.5°

PROPRIETARY LEGEND

EXCEPT AS MAY BE OTHERWISE AUTHORIZED BY CONTRACT, THESE DRAWINGS AND SPECIFICATIONS ARE THE PROPERTY OF LEAR SIEGLER, INC., ARE ISSUED IN STRICT CONFIDENCE, AND SHALL NOT BE REPRODUCED, COPIED OR USED FOR THE MANUFACTURE OR SALE OF THE APPARATUS WITHOUT WRITTEN PERMISSION

CONTR NO
DR TES 1-8-79
CHK [illegible] PURPURA 2-10-79
DSGN
ENGR [illegible] CRANAK
PROJ [illegible] POLLOCK
REL W. TURNER 2-21-79
APPD
APPD

LEAR SIEGLER, INC.
ELECTRONIC INSTRUMENTATION DIVISION
ANAHEIM, CALIFORNIA 92803

SCHEMATIC LOGIC BOARD
ADM-31

SIZE	FSCM NO	DWG NO	LTR
C	98438	129371	A
SCALE	-9	SHEET 2-1 OF 13	

REVISIONS					
SHT	ZONE	LTR	DESCRIPTION	DATE	APPROVED

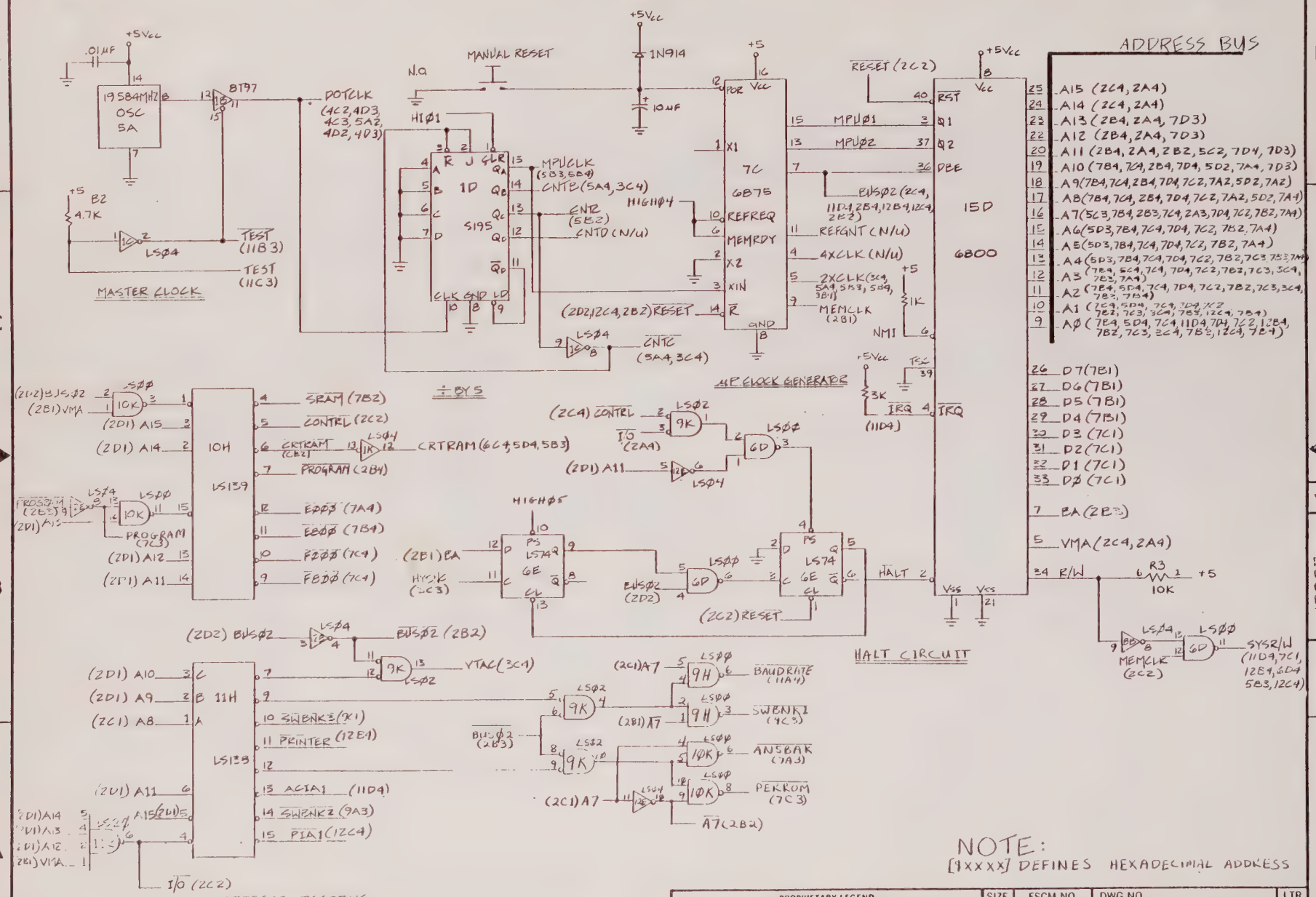

PROPRIETARY LEGEND
EXCEPT AS MAY BE OTHERWISE AUTHORIZED BY CONTRACT, THESE DRAWINGS AND SPECIFICATIONS ARE THE PROPERTY OF LEAR SIEGLER, INC., ARE ISSUED IN STRICT CONFIDENCE, AND SHALL NOT BE REPRODUCED, COPIED, OR USED FOR THE MANUFACTURE OR SALE OF THE APPARATUS WITHOUT WRITTEN PERMISSION.

SIZE	FSCM NO.	DWG NO.	LTR
C	98438	129871	A
SCALE		-9	SHEET 2-2

REVISIONS					
SHT	ZONE	LTR	DESCRIPTION	DATE	APPROVED

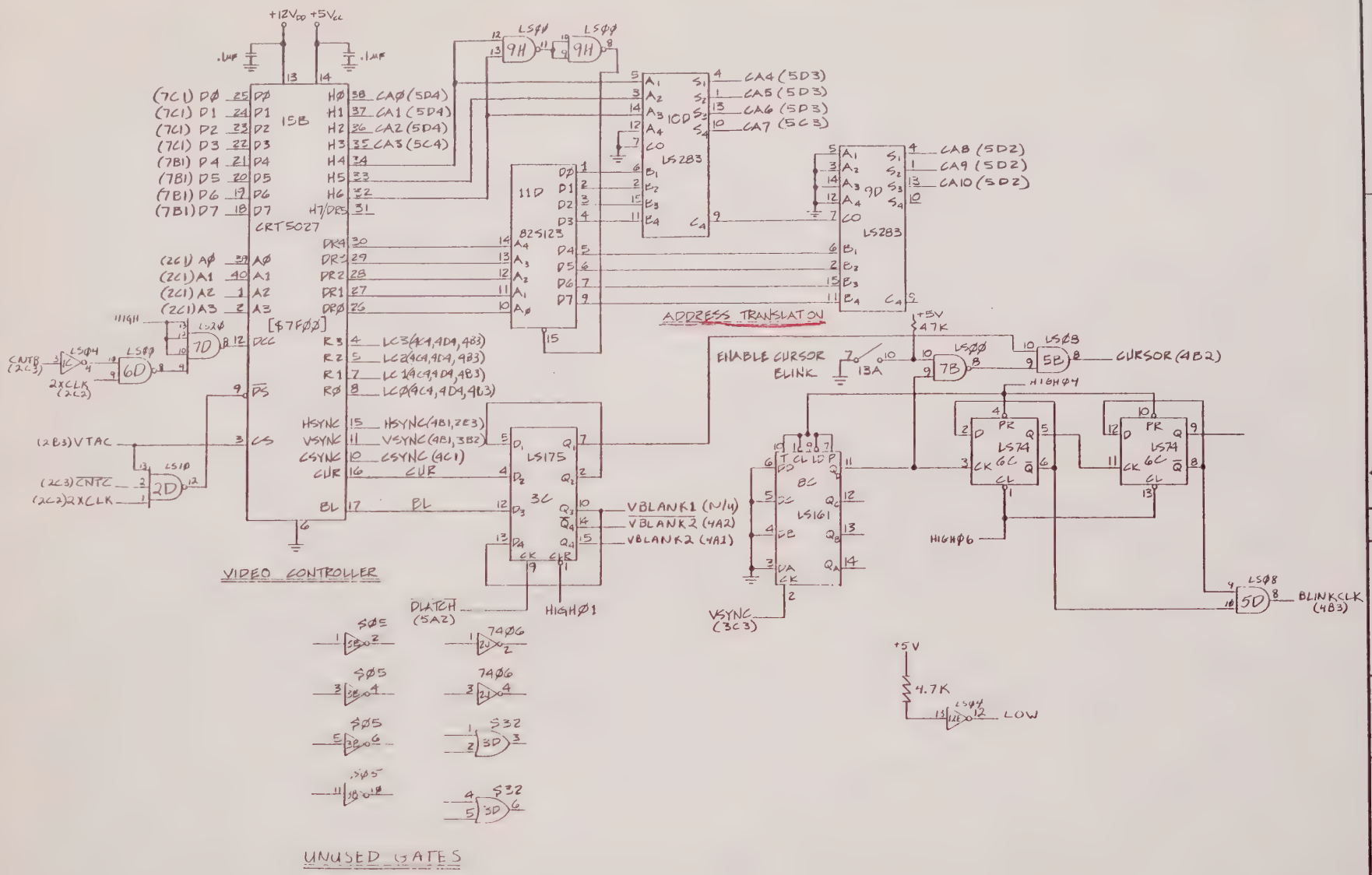

PROPRIETARY LEGEND
EXCEPT AS MAY BE OTHERWISE AUTHORIZED BY CONTRACT, THESE DRAWINGS AND SPECIFICATIONS ARE THE PROPERTY OF LEAR SIEGLER, INC., ARE ISSUED IN STRICT CONFIDENCE, AND SHALL NOT BE REPRODUCED, COPIED, OR USED FOR THE MANUFACTURE OR SALE OF THE APPARATUS WITHOUT WRITTEN PERMISSION

SIZE	FSCM NO.	DWG NO	LTR
C	98438	179371	A
SCALE		-9	SHEET 2-3

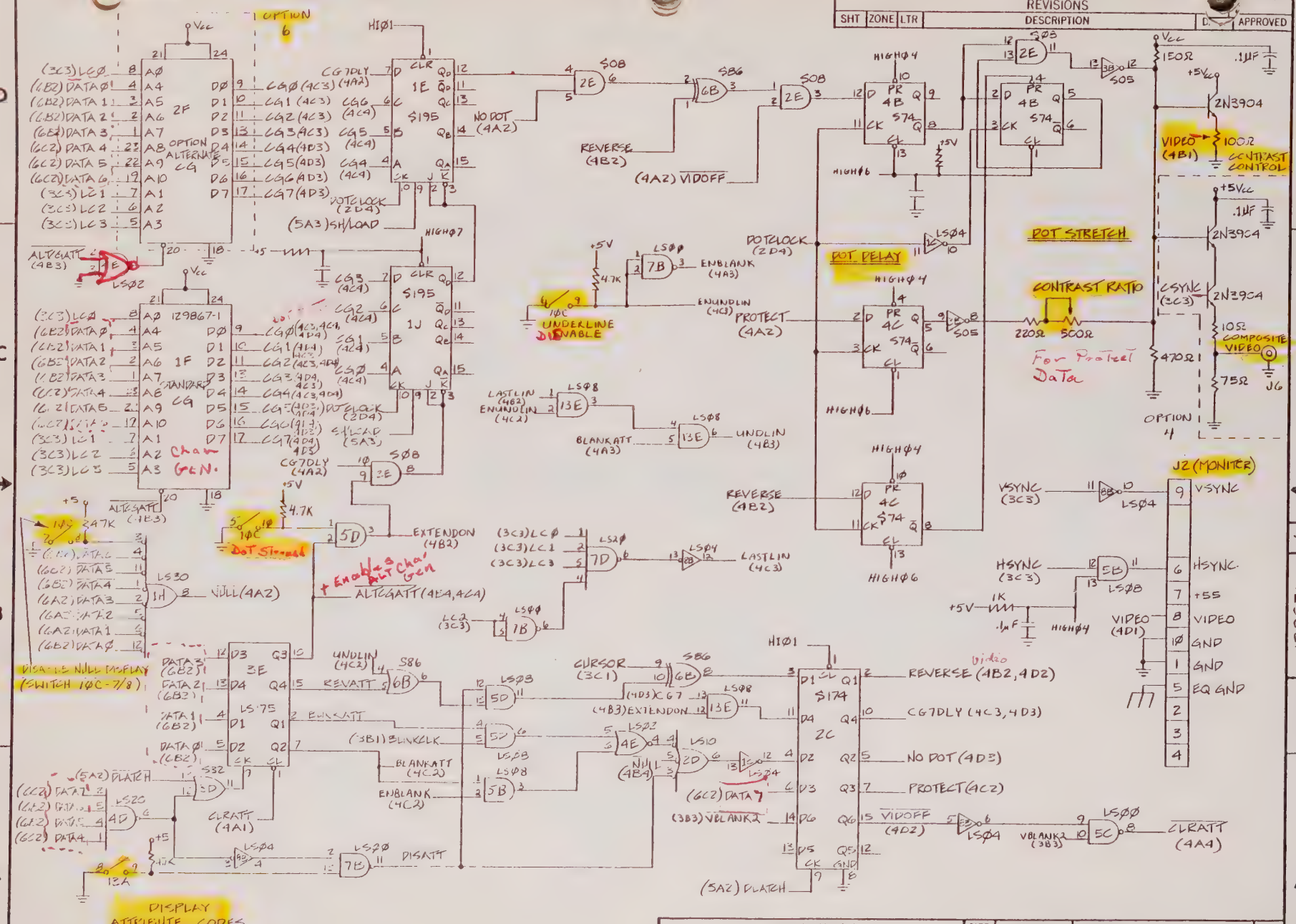
REVISIONS
SHT ZONE LTR DESCRIPTION APPROVED
OPTION 6
OPTION ALTERNATE CG
2F
1E
S195
1J
129867-1
1F
STANDARD CG
Char GEN.
DOT STRETCH
DOT DELAY
CONTRAST RATIO
For Protect Data
CONTRAST CONTROL
VIDEO (4B1)
COMPOSITE VIDEO
J6
OPTION 4
J2 (MONITOR)
VSYNC
HSYNC
+55
VIDEO
GND
EQ GND
UNDERLINE DISABLE
DOT STRETCH
Enables Alt Char Gen
DISABLE NULL DISPLAY (SWITCH 10C-7/8)
DISPLAY ATTRIBUTE CODES
REVERSE (4B2)
(4A2) VIDOFF
NO DOT (4A2)
DOTCLOCK (2D4)
(5A3) SH/LOAD
ENBLANK (4A3)
ENUNDLIN (4C3)
PROTECT (4A2)
LASTLIN (4B2)
ENUNDLIN (4C2)
BLANKATT (4A3)
UNDLIN (4B3)
REVERSE (4B2)
LASTLIN (4C3)
EXTENDON (4B2)
ALTCGATT (4B4,4C4)
NULL (4A2)
UNDLIN (4C2)
REVATT
BLINKATT
(3B1) BLINKCLK
BLANKATT (4C2)
ENBLANK (4C2)
CLRATT (4A1)
DISATT
CURSOR (3C1)
(4B3) EXTENDON
(6C2) DATA 7
(3B3) VBLANK2
(5A2) DLATCH
REVERSE (4B2,4D2)
CG7DLY (4C3,4D3)
NO DOT (4D3)
PROTECT (4C2)
VIDOFF (4D2)
VBLANK2 (3B3)
CLRATT (4A4)
VIDEO (4D1)
VSYNC (3C3)
HSYNC (3C3)
CSYNC (3C3)
LS175
S174
2C
PROPRIETARY LEGEND
EXCEPT AS MAY BE OTHERWISE AUTHORIZED BY CONTRACT, THESE DRAWINGS AND SPECIFICATIONS ARE THE PROPERTY OF LEAR SIEGLER, INC., ARE ISSUED IN STRICT CONFIDENCE, AND SHALL NOT BE REPRODUCED, COPIED, OR USED FOR THE MANUFACTURE OR SALE OF THE APPARATUS WITHOUT WRITTEN PERMISSION.
SIZE C
FSCM NO 98438
DWG NO. 129871
LTR A
SCALE -9
SHEET 2-4

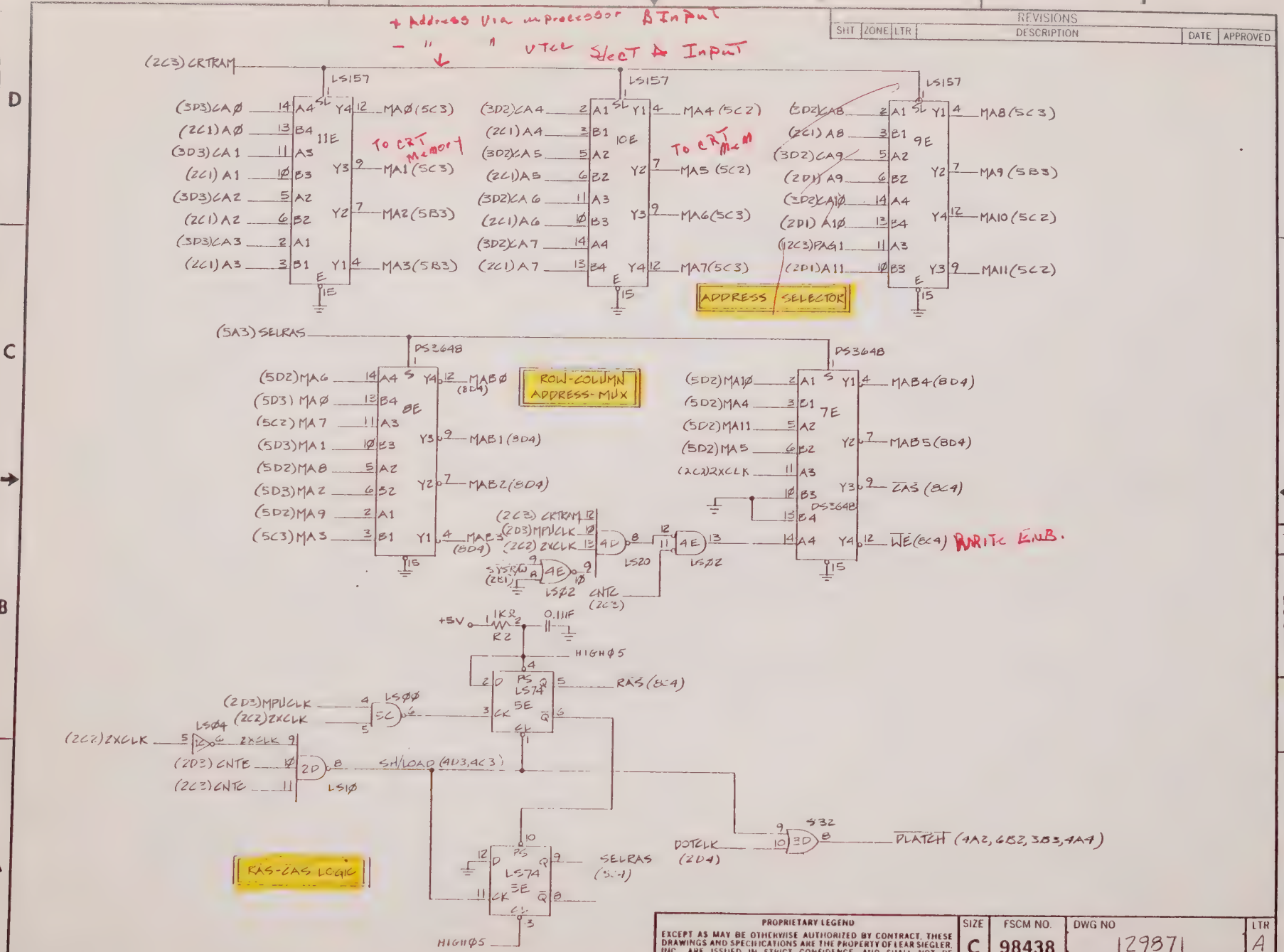

SHT	ZONE	LTR	REVISIONS DESCRIPTION	DATE	APPROVED

PROPRIETARY LEGEND
EXCEPT AS MAY BE OTHERWISE AUTHORIZED BY CONTRACT, THESE DRAWINGS AND SPECIFICATIONS ARE THE PROPERTY OF LEAR SIEGLER, INC. ARE ISSUED IN STRICT CONFIDENCE, AND SHALL NOT BE REPRODUCED, COPIED, OR USED FOR THE MANUFACTURE OR SALE OF THE APPARATUS WITHOUT WRITTEN PERMISSION

SIZE	FSCM NO.	DWG NO	LTR
C	98438	129871	A
SCALE		−4	SHEET 2-5

REVISIONS					
SHT	ZONE	LTR	DESCRIPTION		APPROVED

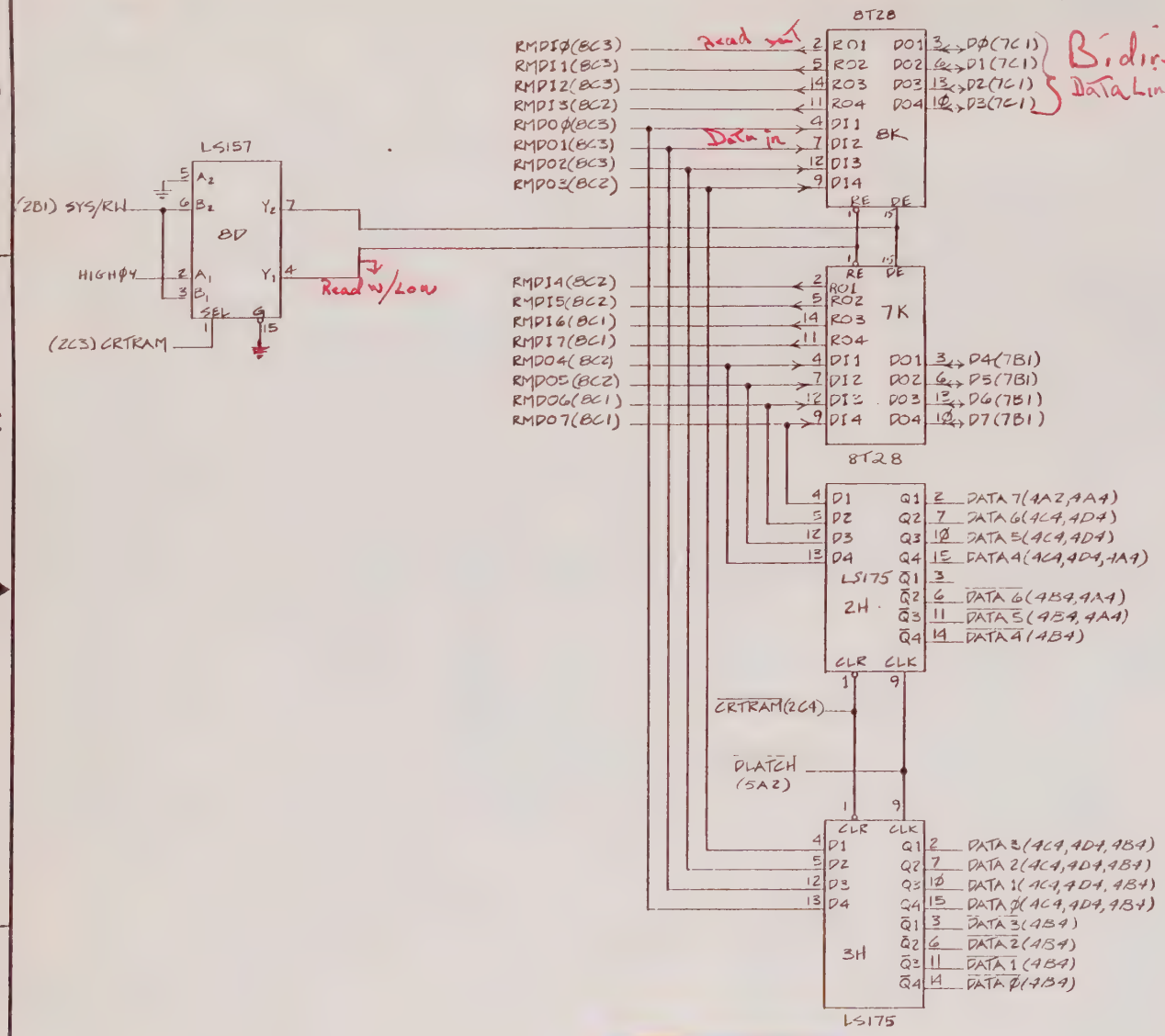

PROPRIETARY LEGEND
EXCEPT AS MAY BE OTHERWISE AUTHORIZED BY CONTRACT, THESE DRAWINGS AND SPECIFICATIONS ARE THE PROPERTY OF LEAR SIEGLER, INC., ARE ISSUED IN STRICT CONFIDENCE, AND SHALL NOT BE REPRODUCED, COPIED, OR USED FOR THE MANUFACTURE OR SALE OF THE APPARATUS WITHOUT WRITTEN PERMISSION.

SIZE	FSCM NO	DWG NO	LTR
C	98438	129371	A
SCALE		-9	SHEET 2-6

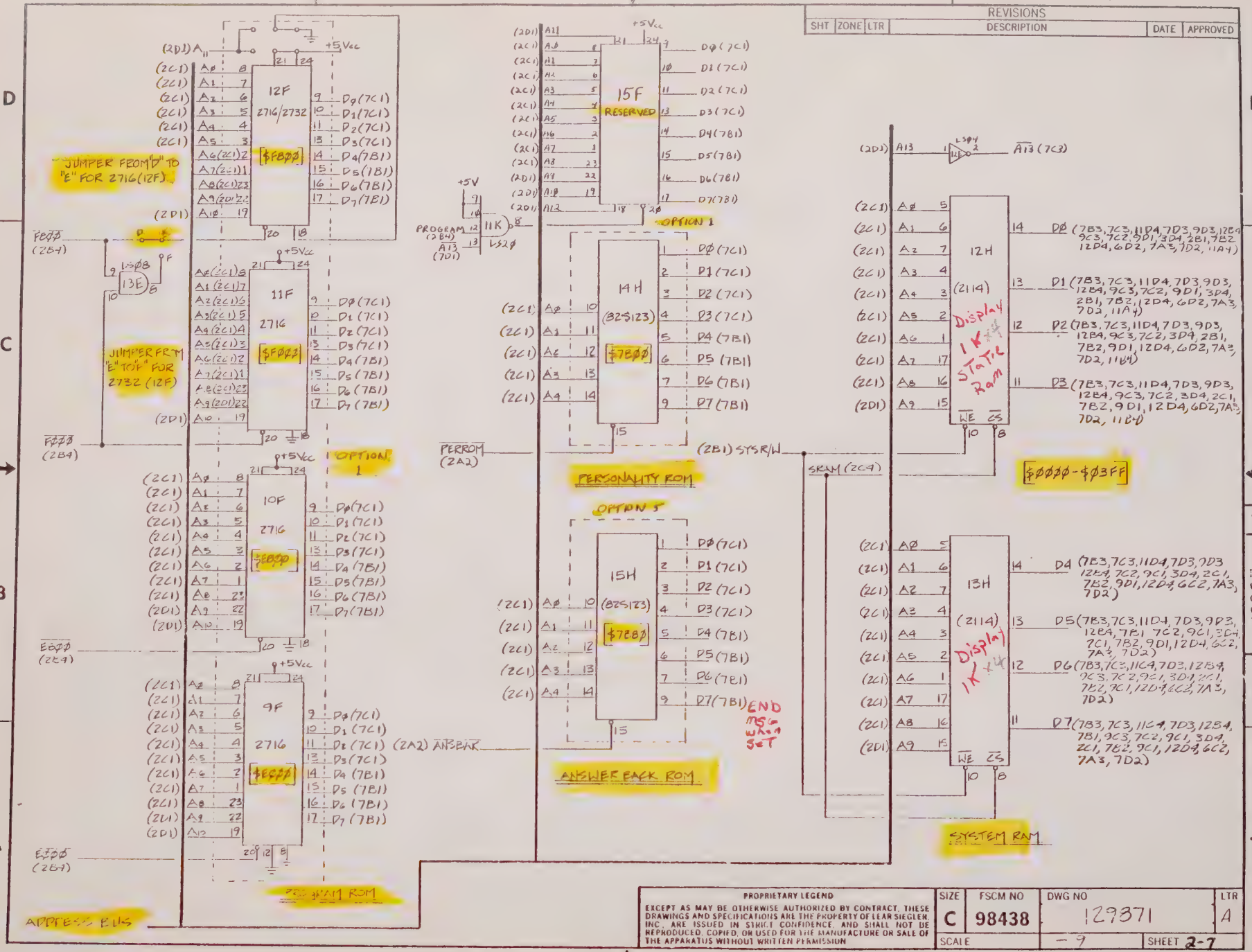
REVISIONS
SHT ZONE LTR DESCRIPTION DATE APPROVED
12F 2716/2732 $F800
JUMPER FROM "D" TO "E" FOR 2716 (12F)
JUMPER FROM "E" TO "F" FOR 2732 (12F)
11F 2716 $F002
10F 2716 $E800
9F 2716 $E000
PROGRAM ROM
OPTION 1
ADDRESS BUS
15F RESERVED
OPTION 1
14H (82S123) $7800
PERSONALITY ROM
OPTION 5
15H (82S123) $7880
ANSWER BACK ROM
END MSG WHEN SET
12H (2114) Display 1K x 4 Static Ram
13H (2114) Display 1K x 4
$0000-$03FF
SYSTEM RAM
PROPRIETARY LEGEND
EXCEPT AS MAY BE OTHERWISE AUTHORIZED BY CONTRACT, THESE DRAWINGS AND SPECIFICATIONS ARE THE PROPERTY OF LEAR SIEGLER, INC. ARE ISSUED IN STRICT CONFIDENCE, AND SHALL NOT BE REPRODUCED, COPIED, OR USED FOR THE MANUFACTURE OR SALE OF THE APPARATUS WITHOUT WRITTEN PERMISSION
SIZE C
FSCM NO 98438
DWG NO 129871
LTR A
SCALE
SHEET 2-7

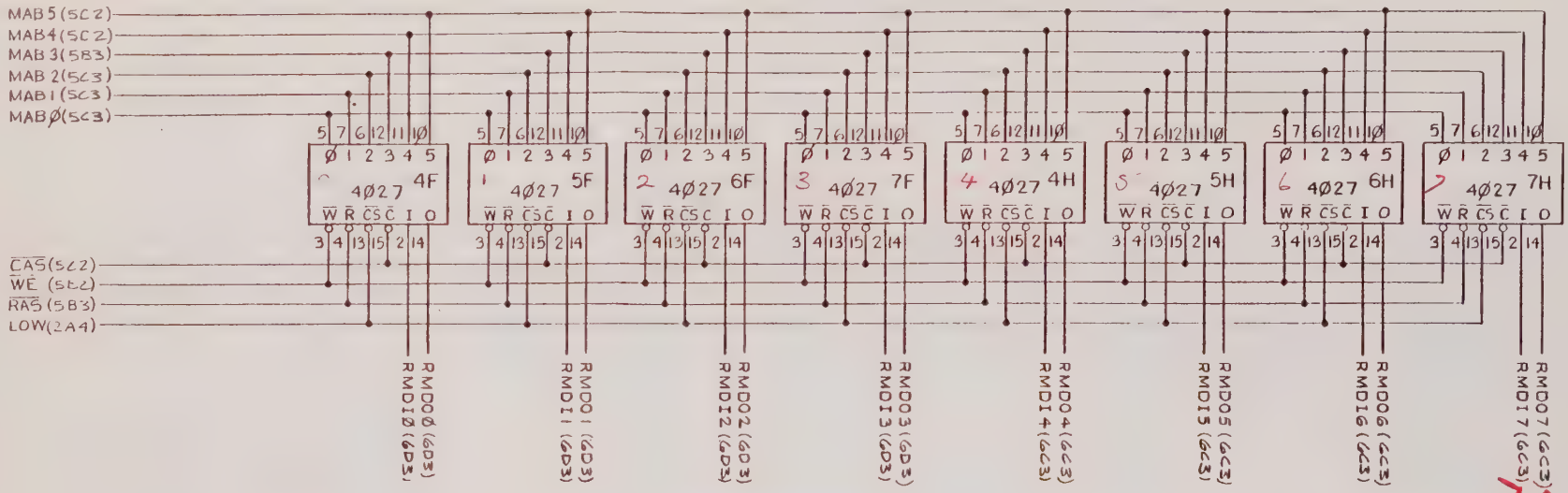

$8000 - $87FF

REFRESH MEMORY

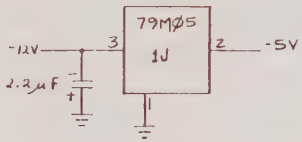

SIZE	CODE IDENT NO.	DWG NO.	LTR
C	98438	129871	A
SCALE NONE		-9	SHEET 2-8

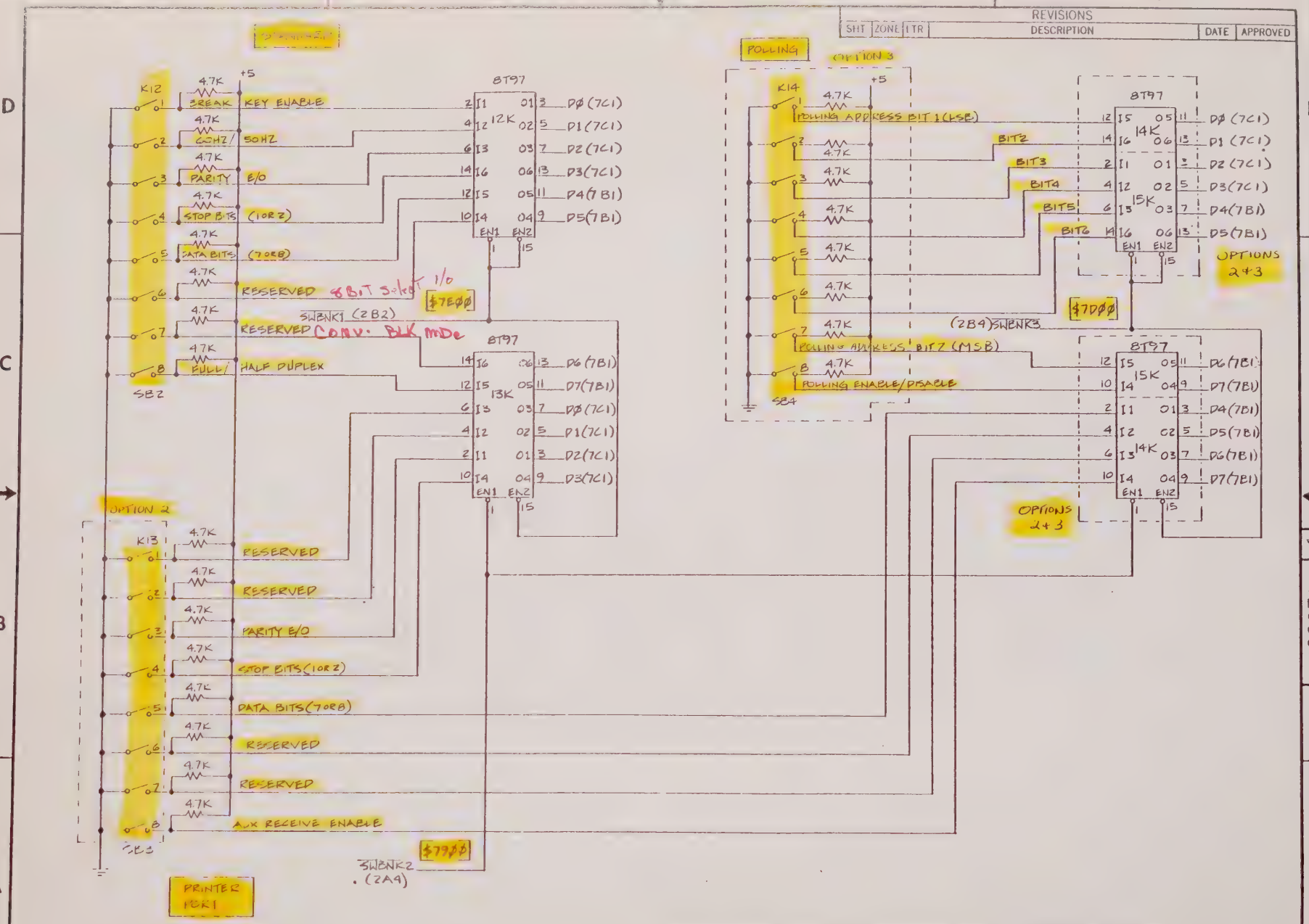

PROPRIETARY LEGEND	SIZE	FSCM NO.	DWG NO	LTR
EXCEPT AS MAY BE OTHERWISE AUTHORIZED BY CONTRACT, THESE DRAWINGS AND SPECIFICATIONS ARE THE PROPERTY OF LEAR SIEGLER, INC., ARE ISSUED IN STRICT CONFIDENCE, AND SHALL NOT BE REPRODUCED, COPIED, OR USED FOR THE MANUFACTURE OR SALE OF THE APPARATUS WITHOUT WRITTEN PERMISSION	C	98438	129871	A
	SCALE		— 9	SHEET 2-9

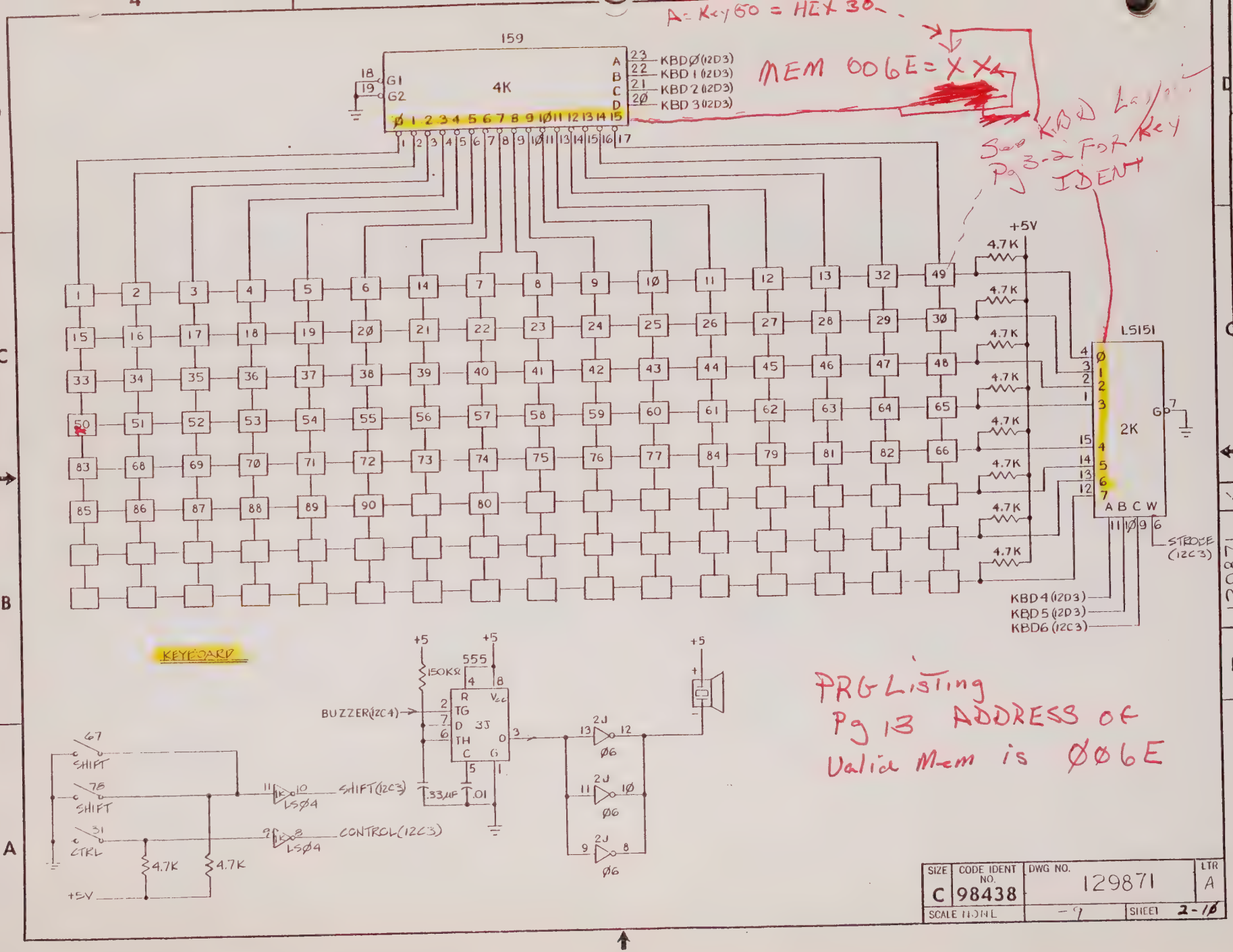
A = Key 50 = HEX 30
MEM 006E = XX
See KBD Layout Pg 3-2 For Key IDENT
159
4K
G1
G2
KBD0 (12D3)
KBD1 (12D3)
KBD2 (12D3)
KBD3 (12D3)
+5V
4.7K
LS151
2K
STROBE (12C3)
KBD4 (12D3)
KBD5 (12D3)
KBD6 (12C3)
KEYBOARD
555
150KΩ
BUZZER (12C4)
3J
.33μF
.01
2J
Ø6
SHIFT
SHIFT
CTRL
LSØ4
SHIFT (12C3)
CONTROL (12C3)
PRG Listing
Pg 13 ADDRESS of
Valid Mem is ØØ6E
SIZE C
CODE IDENT NO. 98438
DWG NO. 129871
LTR A
SCALE NONE
SHEET 2-10

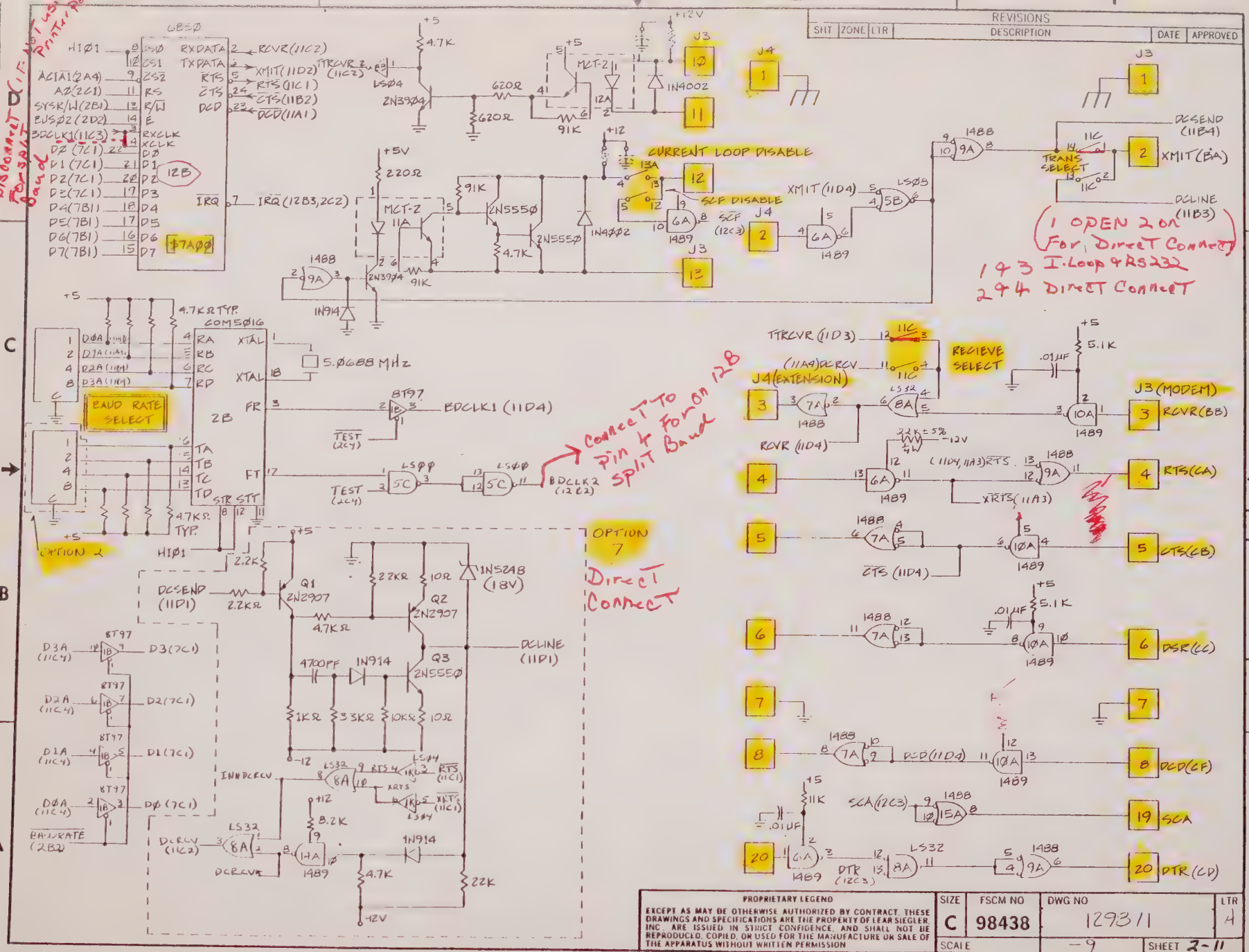
REVISIONS
SHT | ZONE | LTR | DESCRIPTION | DATE | APPROVED
6BØØ
HIØ1
ACIA1(2A4)
AØ(2C1)
SYSR/W(2B1)
BUSØ2(2D2)
BDCLK1(11C3)
D0(7C1)
D1(7C1)
D2(7C1)
D3(7B1)
D4(7B1)
D5(7B1)
D6(7B1)
D7(7B1)
RXDATA
TXDATA
RTS
CTS
DCD
RCVR(11C2)
XMIT(11D2)
RTS(11C1)
CTS(11B2)
DCD(11A1)
IRQ(12B3,2C2)
12B
$7AØØ
4.7K
620Ω
91K
2N3904
LS04
MCT-2
12A
1N4002
J3
J4
CURRENT LOOP DISABLE
SCF DISABLE
SCF (12C3)
220Ω
2N5550
1N4002
1488
1489
XMIT(11D4)
DCSEND (11B4)
XMIT(BA)
DCLINE (11B3)
TRANS SELECT
11C
1 OPEN 2 ON
For Direct Connect
1 & 3 I.Loop & RS232
2 & 4 Direct Connect
Disconnect (if not used) Printer Port
Baud
Split
COM5016
4.7KΩ TYP.
5.0688 MHz
BAUD RATE SELECT
OPTION 2
BDCLK1 (11D4)
TEST (2C4)
BDCLK2 (12B2)
Connect To Pin 4 for on 128 Split Baud
OPTION 7
Direct Connect
TTRCVR (11D3)
(11A4)DCRCV
J4(EXTENSION)
RECIEVE SELECT
RCVR (11D4)
J3(MODEM)
RCVR(BB)
RTS(CA)
CTS(CB)
DSR(CC)
DCD(CF)
SCA
DTR(CD)
XRTS (11A3)
CTS (11D4)
DCD(11D4)
DTR (12C3)
DCSEND (11D1)
Q1 2N2907
Q2 2N2907
Q3 2N5550
1N5248 (18V)
DCLINE (11D1)
D3(7C1)
D2(7C1)
D1(7C1)
DØ(7C1)
BAUDRATE (2B2)
INWDCRCV
DCRCV (11C2)
DCRCVR
8.2K
1N914
22K
-12V
PROPRIETARY LEGEND
EXCEPT AS MAY BE OTHERWISE AUTHORIZED BY CONTRACT, THESE DRAWINGS AND SPECIFICATIONS ARE THE PROPERTY OF LEAR SIEGLER, INC. ARE ISSUED IN STRICT CONFIDENCE, AND SHALL NOT BE REPRODUCED, COPIED, OR USED FOR THE MANUFACTURE OR SALE OF THE APPARATUS WITHOUT WRITTEN PERMISSION
SIZE C
FSCM NO 98438
DWG NO 129311
LTR A
SCALE
SHEET 2-11

KEYBOARD INTERFACE

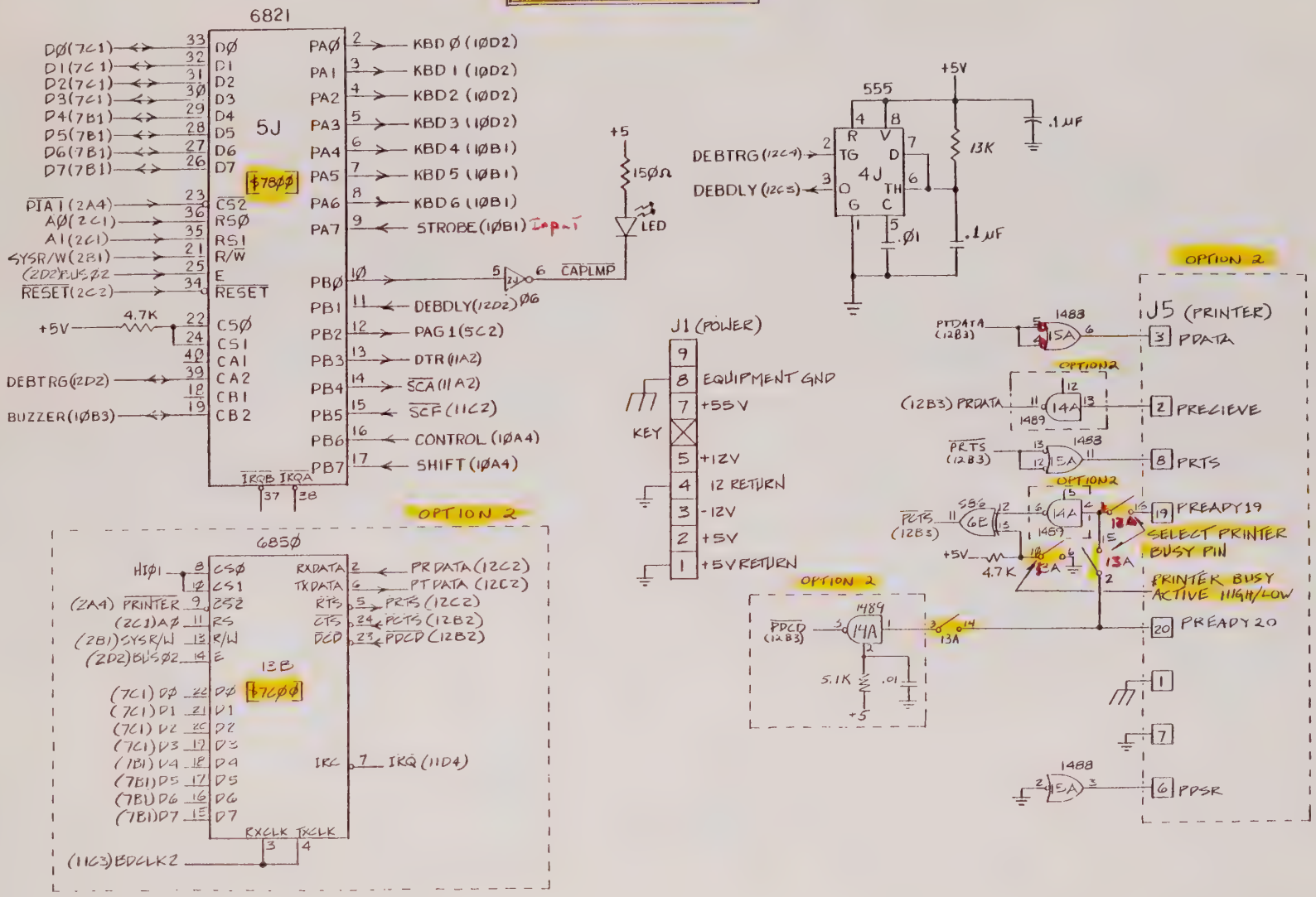

SIZE	CODE IDENT NO.	DWG NO.	LTR
C	98438	129871	A
SCALE NONE		-9	SHEET 2-12

REVISIONS					
SHT	ZONE	LTR	DESCRIPTION	DATE	APPROVED

J1 POWER

PIN NO	FUNCTION	SHEET
1	5V RETURN	12B3
2	+5	12B3
3	-12	12B3
4	12V RETURN	12C3
5	+12	12C3
6	KEY	
7	+55	12C3
8	EQUIP. GND	12C3
9	N/U	

J2 MONITOR

PIN NO.	FUNCTION	SHEET
1	GRD	4B1
2	N/U	"
3	N/U	"
4	N/U	"
5	EQUIP GRD	"
6	HSYNC	"
7	+55	"
8	VIDEO	"
9	VSYNC	4C1
10	GND	4B1

J3 MODEM

PIN NO.	FUNCTION	SHEET
1	EQUIP GRD	11D1
2	XMIT (BA)	"
3	RCVR (BB)	11C1
4	RTS (CA)	"
5	CTS (CB)	11B1
6	DSR (CC)	"
7	GRD	"
8	DCD (CF)	11A1
9	NU	
10	CL IN	11D2
11	CL IN	"
12	CL OUT	"
13	CL OUT	11C2
14	NU	
15	↓	
16	↓	
17	↓	
18	NU	
19	SCA	11A1
20	DTR (CD)	"
21	NU	
22	↓	
23	↓	
24	↓	
25	NU	

J4 EXTENSION

PIN NO	FUNCTION	SHEET
1	EQUIP GRD	11D2
2	XMIT (BA)	11C2
3	RCVR (BA)	"
4	RTS (CA)	"
5	CTS (CB)	11B2
6	DSR (CC)	"
7	GRD	"
8	DCD (CF)	11A2
9	NU	
10	↓	
11	↓	
12	↓	
13	↓	
14	↓	
15	↓	
16	↓	
17	↓	
18	↓	
19	NU	
20	DTR (CD)	11A2
21	NU	
22	↓	
23	↓	
24	↓	
25	NU	

J5 PRINTER

PIN NO.	FUNCTION	SHEET
1	EQUIP. GRD	12B1
2	RCVR (BB)	12C1
3	XMIT (BA)	"
4	NU	
5	"	
6	DSR (CC)	12A1
7	GND	12B1
8	NU	
9	↓	
10	↓	
11	↓	
12	↓	
13	↓	
14	↓	
15	↓	
16	↓	
17	↓	
18	NU	
19	BUSY	12C1
20	DCD	12B1
21	NU	
22	↓	
23	↓	
24	↓	
25	NU	

J6

PIN NO.	FUNCTION	SHEET
1	COMPOSITE VIDEO	4C1

PROPRIETARY LEGEND
EXCEPT AS MAY BE OTHERWISE AUTHORIZED BY CONTRACT, THESE DRAWINGS AND SPECIFICATIONS ARE THE PROPERTY OF LEAR SIEGLER, INC., ARE ISSUED IN STRICT CONFIDENCE, AND SHALL NOT BE REPRODUCED, COPIED, OR USED FOR THE MANUFACTURE OR SALE OF THE APPARATUS WITHOUT WRITTEN PERMISSION

SIZE	FSCM NO	DWG NO.	LTR
C	98438	129871	A
SCALE		-9	SHEET 2-13

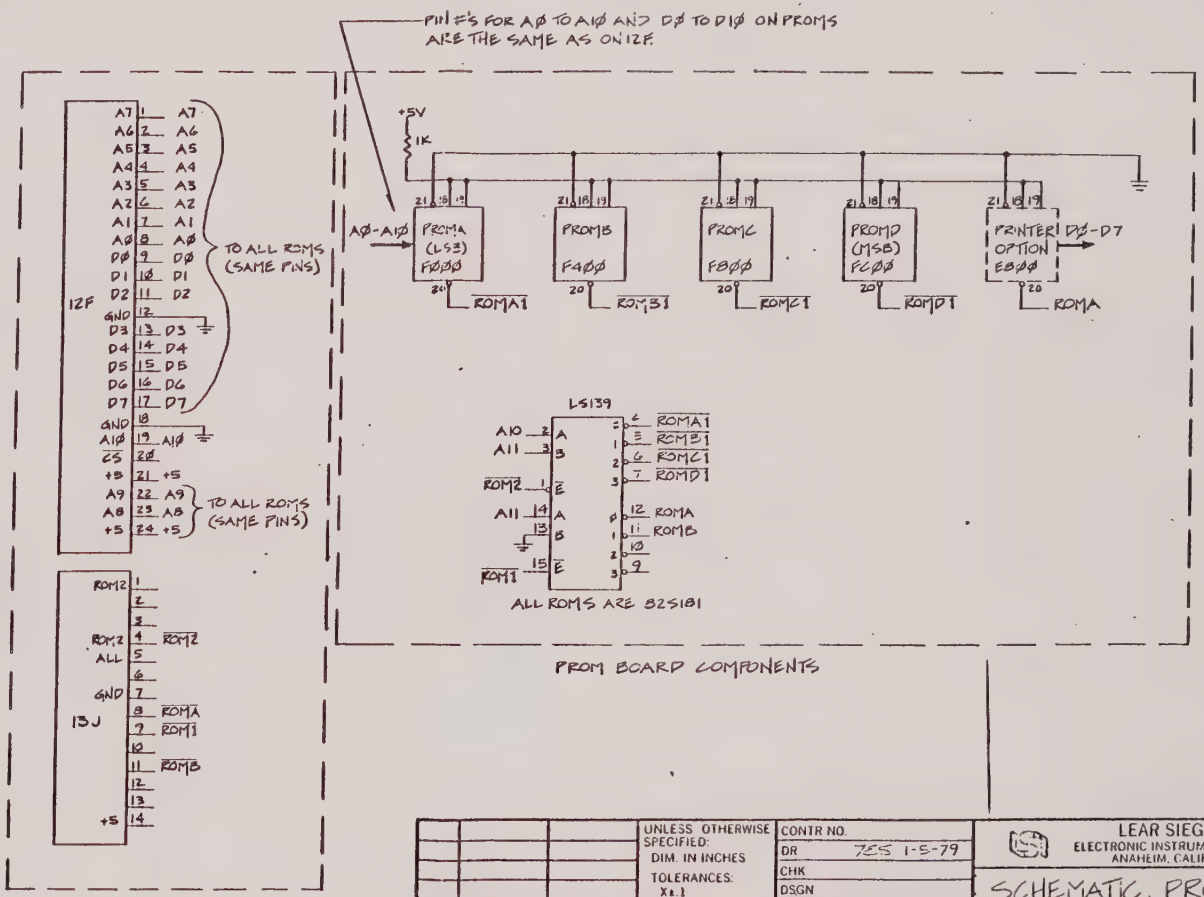

REVISIONS					
SHT	ZONE	LTR	DESCRIPTION	DATE	APPROVED

DASH NO.	NEXT ASSY	USED ON
—	129872	[illegible]
	APPLICATION	

UNLESS OTHERWISE SPECIFIED:
DIM. IN INCHES
TOLERANCES:
X±.1
.XX±.03
.XXX±.010
ANGLES ±0.5°

CONTR NO.
DR 7ES 1-5-79
CHK
DSGN
ENGR
PROJ [illegible] 1/8/79
REL [illegible]
APPD
APPD

LEAR SIEGLER, INC.
ELECTRONIC INSTRUMENTATION DIVISION
ANAHEIM, CALIFORNIA 92803

SCHEMATIC, PROM ADAPTOR, ADM 31-7

SIZE C | FSCM NO. 98438 | DWG NO. 129873 | LTR
SCALE | SHEET 1 OF 1

PROPRIETARY LEGEND
EXCEPT AS MAY BE OTHERWISE AUTHORIZED BY CONTRACT, THESE DRAWINGS AND SPECIFICATIONS ARE THE PROPERTY OF LEAR SIEGLER INC., ARE ISSUED IN STRICT CONFIDENCE AND SHALL NOT BE REPRODUCED, COPIED, OR USED FOR THE MANUFACTURE OR SALE OF THE APPARATUS WITHOUT WRITTEN PERMISSION.

REVISIONS

LTR	SHEET	DESCRIPTION	DATE	APPROVED

NOTES

1. THIS ADAPTER BOARD IS INTENDED TO REPLACE CONFIGURATIONS OF EPROMS USED ON 129860-7 (REF 129541)
   - -1 MAY REPLACE CONFIGURATION 2
   - -11 " " " 3

2. PROGRAM PER 129874

3. TO APPLY THIS BD - 24 PIN SOCKETS MUST BE INSTALLED ON 860-7 AT 9H & 12H & 14 PIN SOCKET AT 13J.

DASH NO.	NEXT ASSY	USED ON
-1		

APPLICATION

UNLESS OTHERWISE SPECIFIED
DIM. IN INCHES
TOLERANCES
.X ± .1
.XX ± .03
.XXX ± .010
ANGLES ± 0.5°
MACH. FIN.
√

DR W. Kelly 12-13-78
CHK
DSGN
ENGR
PROJ Robert D. Pollock 1/8/79
REL [illegible] 2/9/79
CUSTOMER APPD

LEAR SIEGLER, INC.
ELECTRONIC INSTRUMENTATION DIV.
ANAHEIM, CALIF.

P.C. BOARD ASSY
PROM ADAPTER, ADM 31(-7)

SIZE	CODE IDENT		REV
A	98438	129872	

SCALE

SHEET 1 OF 5

FORM 10 1038

FIND NO.	QTY REQD		-11	-1	STOCK NO.	PART OR IDENTIFYING NO.	NOMENCLATURE OR DESCRIPTION	REMARKS
1				✓	CONFIG 2	-1	PROG ADAPTER BD ASSY ADM-31	-7 BD ONLY
2			✓		CONFIG 3	-11	" " " " PRINTER OPTION	
3								
4								
5			1	1		-3	PRINTED WIRING BOARD	
6								
7			5	4	813051	82S181	PROM 2	SIGNETICS
8			1	1		129467-139	I.C.	
9								
10			1	1		CA-14PF-16	DIP PLUG, 14 PIN	CIRCUIT ASSY
11			2	2		CA-24PF-16	DIP PLUG, 24 PIN	"
12								
13			1	1		128533-102	RES 1K	
14								
15			2	2		128518-103	CAP .01	
16			2	2		129469-106	CAP 10 UF	
17			2	2		128518-106	CAP 10 UF	
18			1	1		640357-3	SOCKET, 14 PIN	AMP
19			7	7		640361-3	SOCKET, 24 PIN	AMP
20			REF	REF		129874-001000	PROM	2
21			REF	REF		-002000		
22			REF	REF		-003000		
23			REF	REF		-004000		
24			REF			-005000		
25								

SIZE A
FSCM NO. 98438
SH 2
129872
REV

NOTES:

1. FOR REQUIREMENTS REFER TO 129317 (SOLDER MASK REQD)
2. ALL HOLES .035 DIA MINIMUM AFTER PLATING.

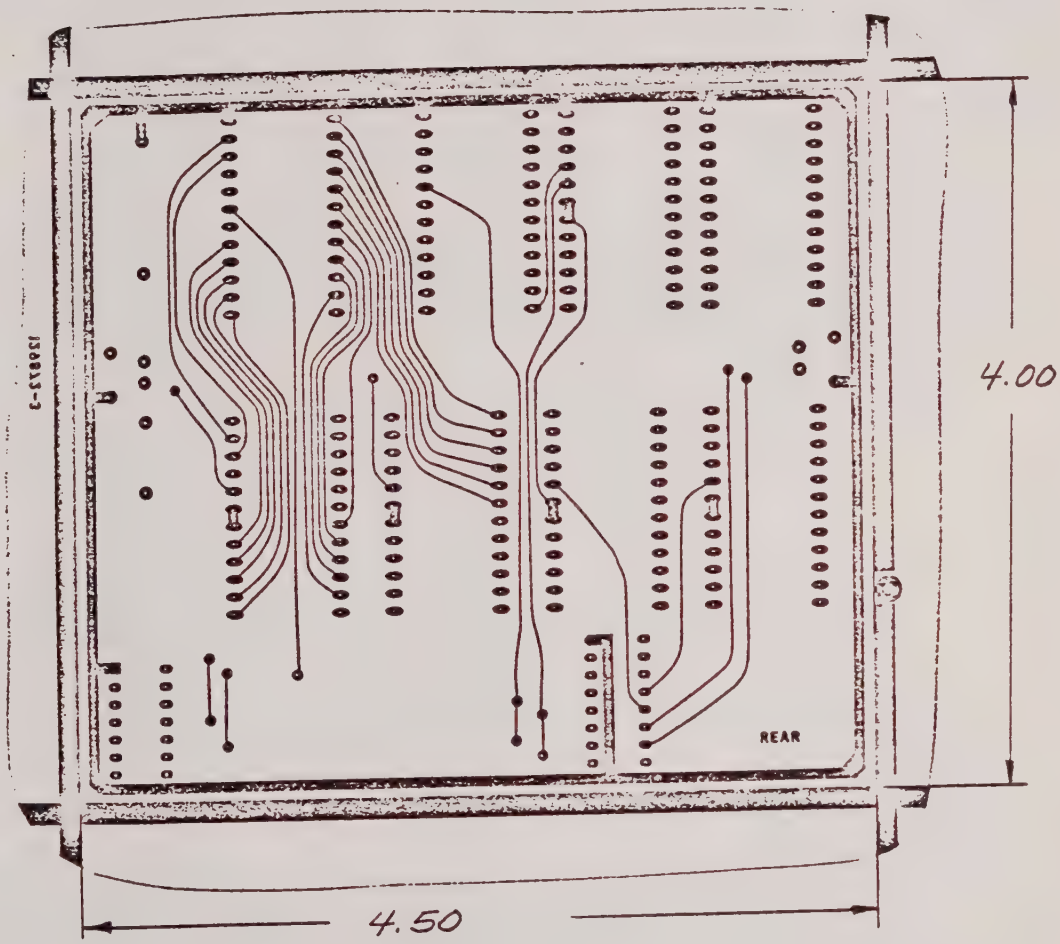

SIZE	CODE IDENT		REV
A	98438	129872	
SCALE 1/1		SHEET 3	

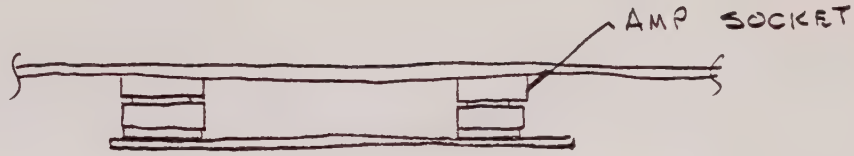

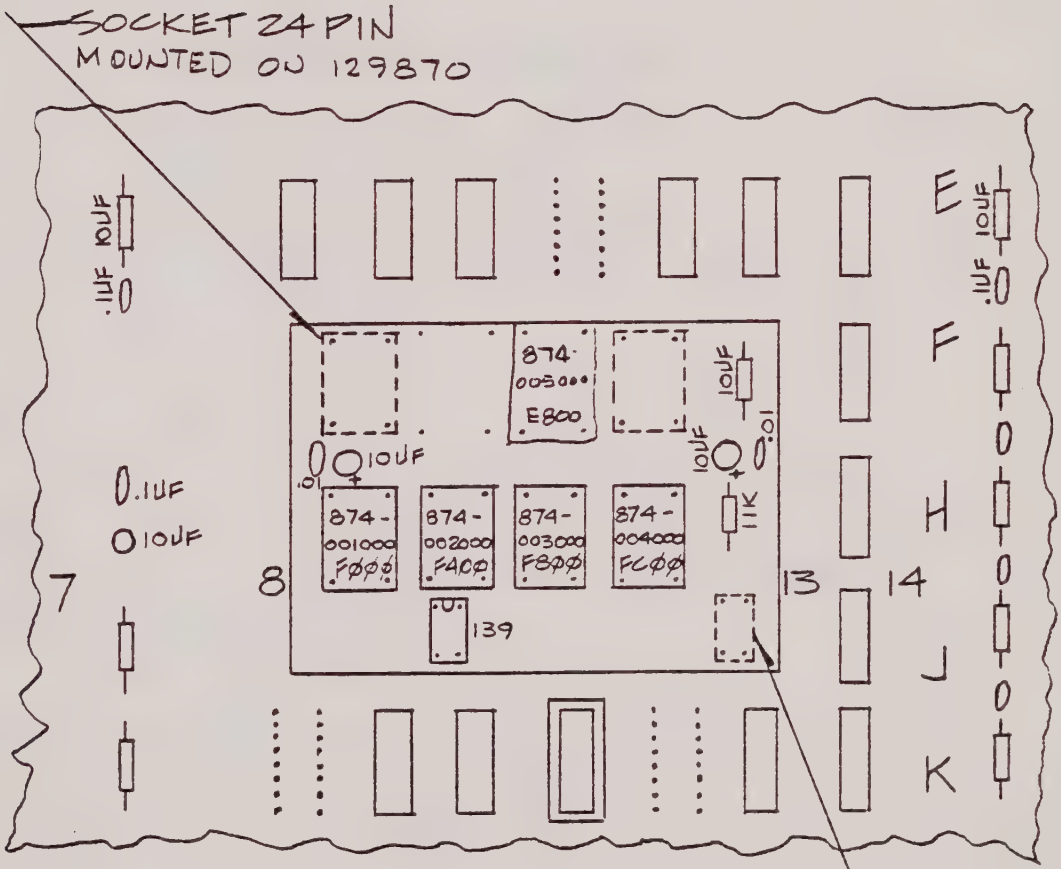

INSTALLATION DETAIL

SOCKET 14 PIN
MOUNTED ON
129870

NOTE:

MOUNTING ILLUSTRATION ONLY.
NOT TO SCALE.

SIZE	CODE IDENT		REV
A	98438	129872	
SCALE NONE		SHEET 5	

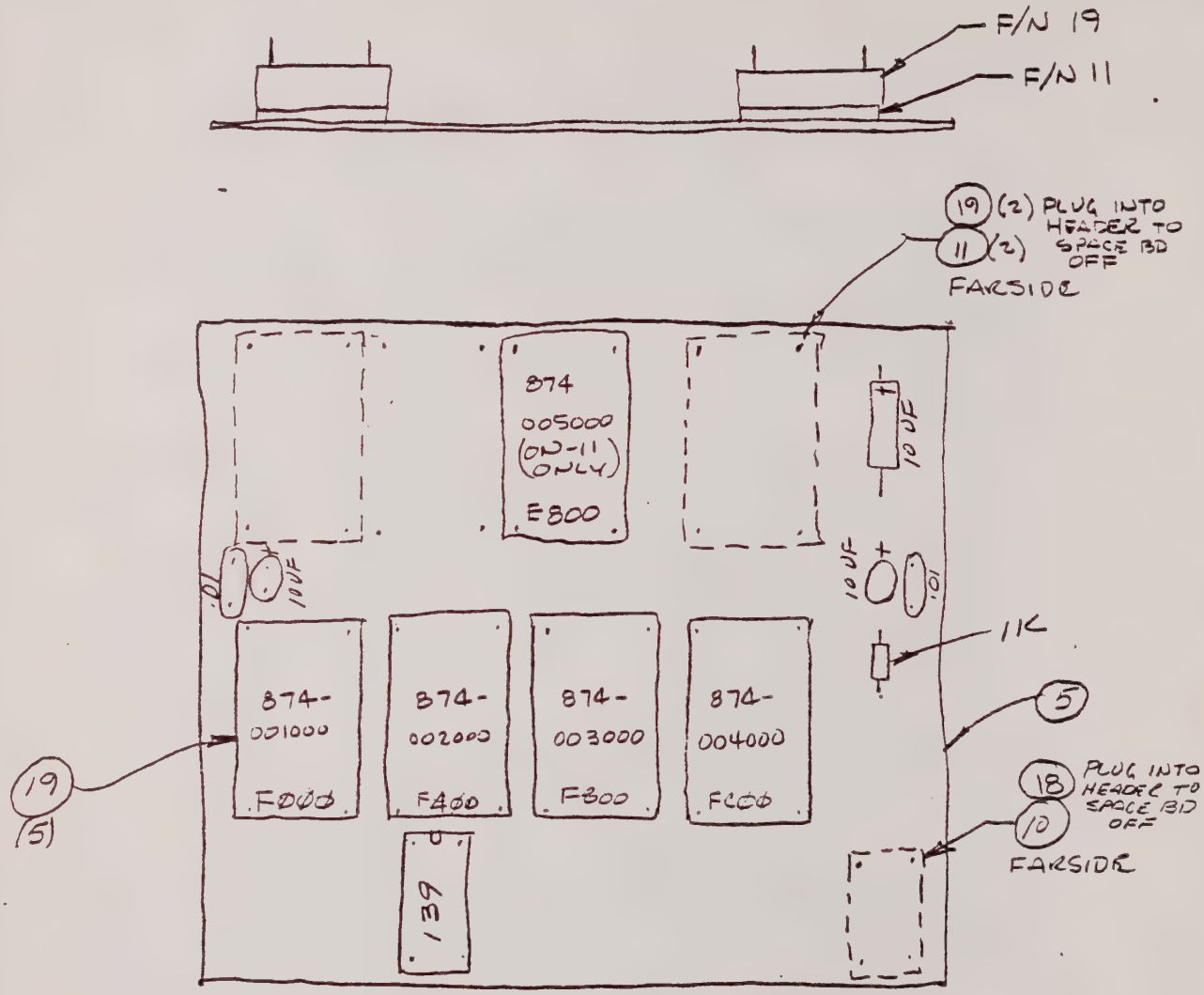

— 1 ASSY
— 11 ASSY (W/PRINTER OPTION)

SIZE	CODE IDENT		REV
A	98438	129872	
SCALE		SHEET 4	

SECTION 7

REPLACEABLE PARTS INFORMATION

7.1 ADM-31 REPLACEABLE PARTS INFORMATION

Included in this section are lists of both the major components as provided by Lear Siegler and the general parts which are a part of the major components.

Spare parts and renewal parts for the ADM-31 are available from Lear Siegler, Data Products Division. When ordering parts, include the following information.

1. ADM-31 Serial Number.
2. Part Description.
3. LSI or Manufacturer's Part Number.

Routine parts orders may be mailed to:

Lear Siegler, Inc.
Data Products Division
714 North Brookhurst Street
Anaheim, CA 92803

Emergency parts orders may be placed by telephoning:

Data Products Customer Service
Telephone (714) 774-1010

or by teletype to:

TELEX 655444
TWX 910-591-1157

The following parts lists are included in this section:

PL129850	(2 Shts)	Data Display Terminal Parts List
PL129860	(6 Shts)	Main PC Board Assembly Parts List

7.2 MONITOR REPLACEABLE PARTS INFORMATION

Refer to Service Manual for TTL Data Display 120/150 Appendix C.

7.3 SWITCHING POWER SUPPLY REPLACEABLE PARTS INFORMATION

There are no replaceable parts on the ADM-31 Switching Power Supply. Should the Switching Power Supply require service or repair (including factory adjustment of the +5-volt output), return the unit to:

Boschert, Inc.
384 Santa Terinita Avenue
Sunnyvale, CA 94086

TWX 910-339-9241
(408) 732-2440

Unnecessary delays may be avoided when returning the unit to Boschert, Incorporated for repair or adjustment, by using the following procedure:

1. Package the unit in accordance with the method of shipment. Enclose a statement containing the unit part number, serial number, and the reason for returning it.

2. Send the unit, transportation prepaid, to the address stipulated for returning the unit.

Refer to ADM-31 Switching Power Supply Maintenance Instructions, Appendix D for further information.

FORM 10-1014 (1-72) * ALL NEW REQUIREMENTS OF ADM-5, ALL OTHER PARTS APPEAR ON ADM-3A

PARTS LIST

CONTR NO.

MODEL

JOB NO.

LEAR SIEGLER, INC.
ELECTRONIC INSTRUMENTATION DIVISION
ANAHEIM CALIFORNIA

98438 | PL 129850

CODE IDENT | SHEET 1 OF 2 SHEETS | REV

PLANNING APPLICATION

PLANNER	REQUIRED TOTAL	PROD. AREA
END ITEM	QTY. THIS RELEASE	SCHEDULE ISSUE DATE
ISSUE DATE	BUY FULL	SCHEDULED COMP. DATE

PREPARED G. JAROSEK
CHECKED
APPROVED 4/10/78

RELEASED H. Zerner
DATE 4-10-78

ITEM NOMENCLATURE
ADM-5 ASSY

ASSY IDENT	NEXT ASSEMBLY

PLANNING NOTES:

4. UL RECOGNIZED COMPONENT; P.W.B. ONLY

ENGINEERING NOTES:

1. PART IS WIRED PER
2. THE TV MONITOR CONSISTS OF THOSE PARTS OF A BALL BROTHERS UNIT PT TTL 120 LESS MAIN CHASSIS & TRANSFORMER. THE TUBE WILL HAVE EMPLOSION FACE PLATE & MOUNTING CLIPS IDENTICAL TO ADM-3 TUBE. UL RECOGNIZED COMPONENT
3. UL RECOGNIZED COMPONENT

LTR	REVISION DESCRIPTION	DATE	APPROVED

RECORD OF REVISION STATUS OF EACH SHEET

1	2	3	4	5	6	7	8	9	10	11	12	13	14	15	16	17	18	19	20	21	22

FIND NO.	QTY REQD			D	CODE IDENT	PART OR IDENTIFYING NO.	NOMENCLATURE OR DESCRIPTION	NOTE	PS	MC	TOTAL REQ	STOCK ISSUED	SHORT QTY	UNIT COST	TOTAL COST	CC	BB	COST BASE	INSP	CODE
* 1				✓		129850-01	ADM-5 ASSY													
2																				
3																				
4																				
5																				
* 6				1		129452-07	HOUSING-TOP													
* 7				1		129452-09	HOUSING - BOTTOM													
8																				
* 9				1		129860-01	P.C BOARD ASSY, LOGIC	4												
* 10							P.C BOARD ASSY, POWER	4												
* 11				1			CLOSURE													
* 12				1		129852-01	T.V. MONITOR	2												
13				1		129480-11	CRT BRACKET ASSY													

PS = PRODUCTION STATION MC = MATERIAL CODE (P = Purchase, F = Fab, A = Assemble) CC = COMMODITY CODE BB = BUY BASE

PARTS LIST

LEAR SIEGLER, INC.
ELECTRONIC INSTRUMENTATION DIVISION
ANAHEIM CALIFORNIA

PL 129850 | REV LTR

CODE IDENT NO. **98438** | SHEET 2

FIND NO.	QTY REQD	CODE IDENT	PART OR IDENTIFYING NO.	NOMENCLATURE OR DESCRIPTION	NOTE		PLANNING: PS	MC	TOTAL REQ	STOCK ISSUED	SHORT QTY	UNIT COST	TOTAL COST	CC	BB	COST BASE	INSP	CODE
* 14	1		129858-5	TRANSFORMER, POWER														
15																		
* 16				CABLE, MONITOR														
17	1		021-0375	CABLE RETAINER		DEK, INC												
* 18				WIRING														
19																		
20	1		TGC0411-TW-B	SWITCH, ROCKER (IMPRINTED ON-OFF)	3	CARLING												
21			[illegible]															
22	1		SR-6L-1	STRAIN RELIEF	3	HEYCO												
* 23	1		129497-29	NAMEPLATE	3													
24	1		129455-03	POWER CORD														
* 25	1		129497-33	NAMEPLATE (PWR IDENT)	3													
* 26	1		129484-13	SCREEN														
27	2		129483-03	RETAINER BRACKET, CRT														
* 28	1			POWER SUPPLY MOUNTING PLATE														
29	4		ADGGABSLF	POP RIVET		USM CORP.												
30	2		10-32 x 3/4 LONG	SCREW - PAN HEAD, STEEL, SLOTTED CADMIUM PLATED		FEDERAL SCREW OR EQUIV.												
31	3		10-32 x 7/16 LONG	SCREW - INDENTED HEX, WASHER HEAD/ SLOT, STEEL; CADMIUM PLATED		" "												
32	2		NO. 10	WASHER, EXT TOOTH, BRONZE NICKEL PLATED		" "												
33	2		8041-NP	NUT, ELECTRICAL, SIZE 10-32 BRASS NICKEL PLATED		" "												
34	2		97255	WASHER, #10 BRASS NICKEL PLATED		" "												
35																		
36																		
37																		
38	1		FIT 221-3/4 x 1.0	SHRINK SLEEVING	3	ALPHA												
39	1		128214-07	LABEL, WARNING														
40	2		214-060307	PLASTI-RING		FASTEX												
41	1																	
42																		
43	1		313002	FUSE 2 AMP SLO BLO	3	LITTELFUSE												
44	1		342838L	FUSE HOLDER	3	LITTELFUSE												

REVISIONS

LTR	SHEET	DESCRIPTION	DATE	APPROVED
A		INC ADCN 1-14 REDRAWN WAS B SIZE	10/12/78	D.H. Thompson
		J.E.S. 10-12-78	10/26/78	W. Turner

DASH NO.	NEXT ASSY	USED ON
-11	129850	
-1	129850	PL129850

APPLICATION

UNLESS OTHERWISE SPECIFIED
DIM. IN INCHES
TOLERANCES
X ± .1
.XX ± .03
.XXX ± .010
ANGLES ± 0.5°
MACH. FIN.
√

DR W. KELLY 4/3/78
CHK
DSGN
ENGR
PROJ D.H. THOMPSON 4/10/78
REL W. TURNER 4/10/78
CUSTOMER APPD

LEAR SIEGLER, INC.
ELECTRONIC INSTRUMENTATION DIV.
ANAHEIM, CALIF.

P.C. BOARD ASSY, ADM-31

SIZE A | CODE IDENT 98438 | PL129860 | REV A

SCALE | SHEET 1 OF 6

FORM 10 1038

FIND NO.	QTY REQD		-11	-1	STOCK NO.	PART OR IDENTIFYING NO.	NOMENCLATURE OR DESCRIPTION	REMARKS
1				✓		-1	P.C. BOARD ASSY.	
2			✓			-11		
3								
4			REF	REF		129861	SCHEMATIC, ADM 31	
5				1		-5	PRINTED WIRING BOARD	
6			1			-7	PRINTED WIRING BOARD	
7								
8			1	1		129762-3	OSCILLATOR	
9			1	1		129851-1	KEYBOARD SET	
10			1	1		800A-5.0688 MHZ	CRYSTAL	STANDARD CRYSTAL
11			4	4		129473-3	JACK SOCKET	
12								
13								
14			1	1		129467-00	LS TYPE	
15			4	4		-04		
16			4	3		-08		
17			1	1		-20		
18			1	1		-30		
19			3	3		-32		
20			3	2		-74		
21			1	1		-86		
22			1	1		-151		
23			2	2		-161		
24			6	5		-175		
			2	2		-283		

SIZE A
FSCM NO. 98438
PL 129860
SH 2
REV A

FIND NO.	QTY REQD				STOCK NO.	PART OR IDENTIFYING NO.	NOMENCLATURE OR DESCRIPTION	REMARKS
			-11	-1				
26								
27			1	1		128348-04		
28			1	1		-06		
29			1	1		-154		
30			1	1		-159		
31			1	1		-166		
32			3	3		-1488		
33			2	2		-1489		
34			2	2		-3648		
35			1	1		-5016		
36			1	1		-5027		
37			6	6		-8T28		
38			5	5		-8T95		
39			2	2		-555		
40			8	8		-4102		
41			1	1		128348-79M05		
42			2	1		128348-21		
43			1			129467-02		
44								
45			1	1		129826-05	S TYPE	
46			1	1		-10		
47			1	1		-11		
48			1	1		-37		
49			1	1		-74		
50			1	1		-138		

SIZE A
FSCM NO. 98438
PL 129860
SH 3
REV A

FIND NO.	QTY REQD		-11	-1	STOCK NO.	PART OR IDENTIFYING NO.	NOMENCLATURE OR DESCRIPTION	REMARKS
51			4	4		129826-157		
52								
53			1	1		129824-6800		
54			1	1		-6821		
55			1	1		-6850		
56			1	1		-6875		
57								
58			8	8		129466-4027		
59								
60			2	2		129827-00	2716 PROM	PROGRAM OPTIONS MAY INCREASE TO 4
61			1	1		129753-00	82S123 PROM	
62			1	1		129753-05	PROM ADDRESS TRANS	
63			2	2		129498-01	OPT ISOLATOR	
64			1	1		129867-1	ROM-CHAR GEN	
65								
66								
67								
68								
69								
70			1	1		1N4002	DIODE	
71			1	1		1N914	DIODE	
72			5	5		2N3904	TRANSISTOR	
73			2	2		2N5550	TRANSISTOR	
74			1	1		5082-4658	LED	HEWLETT PACKARD
75			1	1		AI-254	AUDIO INDICATOR	HEWLETT PACKARD

SIZE A
FSCM NO. 98438
PL129860
SH 4
REV A

FIND NO.	QTY REQD				STOCK NO.	PART OR IDENTIFYING NO.	NOMENCLATURE OR DESCRIPTION	REMARKS
			-11	-1				
76			31	31		128518-103	CAP .01 UF	
77			18	18		129329-104	.1 UF	
78			1	1		128518-225	2.2 UF	
79			2	2		128518-106	10 UF	
80			23	23		129469-106	10 UF, 25V	
81			1	1		129468-4751	4.7 UF 25V	
82			1	1		128518-334	.33 UF	
83								
84								
85			5	5		128533-150	RES 15Ω	
86			2	2		-151	150Ω	
87			2	2		-221	220Ω	
88			1	1		-101	100Ω	
89			2	2		-621	620Ω	
90			5	4		-102	1K	
91			3	3		-302	3K	
92			5	5		-472	4.7K	
93			4	4		-512	5.1K	
94			1	1		-471	470Ω	
95			1	1		-113	11K	
96			3	3		-913	91K	
97			1	1		-154	150K	
98			1	1		-133	13K	
99			1			DQ7432	POT 500/100Ω	CTS
100				1		18M521	POT 500/100 Ω	ALLEN BRADLEY

SIZE A
FSCM NO. 98438
PL129860
SH 5
REV A

FIND NO.	QTY REQD		-11	-1	STOCK NO.	PART OR IDENTIFYING NO.	NOMENCLATURE OR DESCRIPTION	REMARKS
101								
102								
103			4	4		129476-472	RES. MODULE 4.7K	
104			1	1		785-1-R4.7K	" " 4.7K	BECKMAN
105								
106			1			1-435668-8	SWITCH 8 POS	AMP
107				1		435640-1	SWITCH 7 POS	AMP
108			1	1		1-435668-8	SWITCH 8 POS	AMP
109			1	1		39-251-RED	SWITCH	GRAYHILL
110			1	1		1A216031G	SWITCH	EECO
111								
112			2	2		206584-1	CONN 25 PIN	AMP
113			1	1		09-65-1091	CONN 9 PIN	MOLEX
114			1	1		1-640456-0	CONN 10PIN	AMP
115								
116								
117								
118			3	3		CA14S-10SD	SOCKET 14PIN	CIRCUIT ASSEMBLY
119			8	7		CA16S-10SD	SOCKET 16PIN	" "
120			7	7		CA24S-10SD	SOCKET 24PIN	" "
121			3	3		CA40S-10SD	SOCKET 40PIN	" "
122						CA18S-10SD	SOCKET 18 PIN	
123			1	1		7717-5 DAP	INSULATOR, TO-5	THERMALLOY
124								
125			13	13		# 4	SCREW, THRD CUTTING, TYPE F	

SIZE A
FSCM NO 98438
SH 6
PL 129860
REV A

APPENDIX A
OPERATOR'S QUICK REFERENCE GUIDES

To Check out Display Memory
CHG Bit 8 in Personaility

To Check Prgm. Mode write A Prgm. and
Send it (See pg A-5 For Cntrl Codes)(Also see →

~~Esc U - Set Prg Mode~~
~~This is A Test~~

ADM-31 INCOMING CHECKOUT PROCEDURE

REFERENCE - ADM-31 OPERATOR'S MANUAL DP-111

1. After unpacking the terminal, open the top cover by removing the two recessed screws located on the bottom near the two front corners.

2. Verify that the connectors are all seated properly, and that there is no visible damage to any of the components or hardware.

3. Verify that the switches at locations K10, K11, K12 and A12 are set in accordance with the desired configuration of the terminal. (Ref. Operator's Manual ADM-31, pages 2-6 and 2-7.)

4. Using a short piece of wire (or an unbent paper clip), short together pins 2 and 3 of the modem connector on the rear panel. The pin numbers are stamped on the connector adjacent to the holes they correspond to.

5. Power the terminal on and note that the cursor appears at the upper left corner.

6. Initiate the following keyboard commands and verify that each function performs as indicated:

   NOTE: "Control" functions require holding the "control" key down while hitting the other key; "escape" functions require hitting the "escape" key, releasing it, then hitting the next key(s) in the sequence.

KEY SEQUENCE	RESULT
a) Control-G	Rings audible alarm (bell)
b) Escape B	Sets the terminal in block mode. Typing characters on the keyboard should result in them being displayed as they are typed. At this point, type several lines of random characters on the screen and, when done, press the HOME key to send the cursor back to the upper left corner of the screen.
c) Character Insert	Each time this key is depressed, the characters to the right of the cursor should move one position to the right.
d) Character Delete	Each time this key is depressed, the characters to the right of the cursor should move one position to the left.
e) Line Insert	Each time this key is depressed, the characters on each of the lines of display should move down one line.

f)	Line Delete	Each time this key is depressed, each line of display should move up one line.
g)	Line Erase	Each time this key is depressed, the characters to the right of the cursor should disappear.
h)	Page Erase	When this key is depressed, all the characters from the right of the cursor to the bottom of the screen should disappear.
i)	Shift, Clear (pressed simultaneously)	Should clear the screen completely and return the cursor to the Home position.
j)	Escape C	Sets the terminal in conversation mode.
k)	Escape DF	Sets the terminal in full duplex. Typing from the keyboard should still result in whatever is typed appearing on the display. Type a line's worth of data leaving the cursor at the end of the line.
l)	Send Line	Depressing this key should cause the cursor to move through the line it was on and then the same characters to appear on the next line down.
m)	Send Page	(Before depressing this key, move the cursor down one line by pressing the "↓" (down cursor) key.) Depressing this key should result in the cursor moving through the two lines of characters that were on the screen and then the same two lines appearing further down the screen. Upon completion, clear the screen by pressing SHIFT and CLEAR simultaneously.
n)	Escape)	Sets Write Protect mode. Typing character should result in the displayed characters being reduced in intensity. Type half a line's worth of characters.
o)	Escape (	Takes the terminal out of Write Protect mode. Type the rest of the line's worth of characters and verify that they are normal intensity. (Leave the cursor at the end of the line after typing.)

p) Escape &	Sets the terminal in Protect Mode. (Note that the cursor will move back to the first unprotected character on the line. With the cursor right key (→), move the cursor back to the end of the line.
q) Escape 4	This sequence should result in only the unprotected characters (normal intensity) being displayed on the second line after the cursor moves through the display.
r) Shift, Clear (Simultaneously)	Should clear all unprotected characters, leaving the protected characters on the screen.
s) Escape '	Takes the terminal out of Protect Mode. Again, depress SHIFT and CLEAR simultaneously and now all the characters should clear.
t) U and *	Alternately enter U's and *'s on the first line of display until the cursor reaches the end of the line.
u) Escape v	Sets auto-page mode.
v) Send Page	Depressing this key should result in the U's and *'s appearing on the next line down. Press the key again the the two lines should now appear further down the page, making four lines on the display. Press the key again and note that the U's and *'s are the only characters that appear anywhere. Continue this sequence for six more SEND PAGE operations and note that only U's and *'s appear at any location on the screen.
w) Escape +	Clears the screen to spaces. Note that the cursor returns to the home position.
x) Escape D H	Sets the terminal in the half duplex mode. Type the following sequence and verify that each character appears <u>TWICE</u> as the key is pressed. Type A B D H P 1.

y) Escape o Ø — Displays the personality codes that the terminal presently has in it. Reference pg. 3-38 for description of the tables that will be displayed on the terminal.

z) Escape * — This sequence should clear the terminal and return the cursor to the home position.

7. Remove the shorting strap from pins 2 and 3 on the rear of the terminal.

8. Again verify that the internal switches have all been set for the correct configuration with respect to the computer.

9. Replace the two mounting screws on the cover assembly.

10. The terminal is now ready for operation.

NOTE THAT IT IS IMPORTANT TO TYPE UPPER AND LOWER CASE AS INDICATED.

NOTES

1. A Polling Terminal will <u>not</u> Beep when The Function Key is Depressed A NON Polling Terminal will

Shift/Function 'B'. Block Mode (Local in FDX)

ASCII & IEEE (GPIB) CODE CHART

BITS B7 B6 B5 / B4 B3 B2 B1	0 0 0	0 0 1	0 1 0	0 1 1	1 0 0	1 0 1	1 1 0	1 1 1
	CONTROL		NUMBERS SYMBOLS		UPPER CASE		LOWER CASE	
0 0 0 0	0 NUL 0	20 DLE 16	40 SP 32	60 0 48	100 @ 64	120 P 80	140 ` 96	160 p 112
0 0 0 1	1 GTL SOH 1	21 LLO DC1 17	41 ! 33	61 1 49	101 A 65	121 Q 81	141 a 97	161 q 113
0 0 1 0	2 STX 2	22 DC2 18	42 " 34	62 2 50	102 B 66	122 R 82	142 b 98	162 r 114
0 0 1 1	3 ETX 3	23 DC3 19	43 # 35	63 3 51	103 C 67	123 S 83	143 c 99	163 s 115
0 1 0 0	4 SDC EOT 4	24 DCL DC4 20	44 $ 36	64 4 52	104 D 68	124 T 84	144 d 100	164 t 116
0 1 0 1	5 PPC ENQ 5	25 PPU NAK 21	45 % 37	65 5 53	105 E 69	125 U 85	145 e 101	165 u 117
0 1 1 0	6 ACK 6	26 SYN 22	46 & 38	66 6 54	106 F 70	126 V 86	146 f 102	166 v 118
0 1 1 1	7 BEL 7	27 ETB 23	47 ' 39	67 7 55	107 G 71	127 W 87	147 g 103	167 w 119
1 0 0 0	10 ← GET BS 8	30 SPE CAN 24	50 (40	70 8 56	110 H 72	130 X 88	150 h 104	170 x 120
1 0 0 1	11 Tab TCT HT 9 SKIP	31 SPD EM 25	51) 41	71 9 57	111 I 73	131 Y 89	151 i 105	171 y 121
1 0 1 0	12 LF ↓ 10	32 SUB 26	52 * 42	72 : 58	112 J 74	132 Z 90	152 j 106	172 z 122
1 0 1 1	13 VT ↑ 11	33 ESC 27	53 + 43	73 ; 59	113 K 75	133 [91	153 k 107	173 { 123
1 1 0 0	14 → FF 12	34 Outputs protected FS 28 Data	54 , 44	74 < 60	114 L 76	134 \ 92	154 l 108	174 | 124
1 1 0 1	15 Carriage CR 13 Return	35 GS 29	55 − 45	75 = 61	115 M 77	135] 93	155 m 109	175 } 125
1 1 1 0	16 SO 14	36 Home RS 30	56 . 46	76 > 62	116 N 78	136 ^ 94	156 n 110	176 ~ 126
1 1 1 1	17 SI 15	37 New Line US 31	57 / 47	77 UNL ? 63	117 O 79	137 UNT — 95	157 o 111	177 RUBOUT (DEL) 127
	ADDRESSED COMMANDS	UNIVERSAL COMMANDS	LISTEN ADDRESSES		TALK ADDRESSES		SECONDARY ADDRESSES OR COMMANDS	

KEY

octal | 25 | PPU | GPIB code
NAK | ASCII character *
hex | 15 | 21 | decimal

* used with Lear Siegler Prods *

Get familiar with ASCII and IEEE-488 codes with the help of this handy table. (Copyright © 1979, Tektronix Inc. All rights reserved. Reproduced by permission.)

Line 1
Line 2 Default Conditions
Line 3

OPERATOR'S QUICK REFERENCE GUIDE TO PERSONALITY CHANGE SEQUENCE

Keys Used: ESC/(ASCII CODE)/ (HEX CODE) Ex. Ø – –

FUNCTION	ASCII CHARACTER	HEX CODE
Escape Leadin Character	0	
End Block Character	1	
2nd End Block Character	2	Enter HEX code
New Line Character	3	associated with
2nd New Line Character	4	desired ASCII
Field Separator Character	5	character
Function Leadin Character	6	
Parity Leadin Character	7	
Clear/Erase Character	8	
Not Used	9	
RTS Off Delay Character	A	00 = Long Delays 01 = Short Delays

20	21	22	23	24	25	26	27	28	29	2A	2B	2C	2D	2E	2F
space	!	"	#	$	%	&	'	(	)	*	+	,	-	.	/
30	31	32	33	34	35	36	37	38	39	3A	3B	3C	3D	3E	3F
0	1	2	3	4	5	6	7	8	9	:	;	<	=	>	?
40	41	42	43	44	45	46	47	48	49	4A	4B	4C	4D	4E	4F
@	A	B	C	D	E	F	G	H	I	J	K	L	M	N	O
50	51	52	53	44	55	56	57	58	59	5A	5B	5C	5D	5E	5F
P	Q	R	S	T	U	V	W	X	Y	Z	[	\	]	^	_
60	61	62	63	64	65	66	67	68	69	6A	6B	6C	6D	6E	6F
'	a	b	c	d	e	f	g	h	i	j	k	l	m	n	o
70	71	72	73	74	75	76	77	78	79	7A	7B	7C	7D	7E	7F
p	q	r	s	t	u	v	w	x	y	z	{	|	}	~	DEL

OPERATOR'S QUICK REFERENCE GUIDE TO

VIDEO ATTRIBUTE CONTROL SEQUENCE

Keys Used: ESC/SHIFT/G/(ASCII Character)

FUNCTION	ASCII CHARACTER
RESET TO STANDARD VIDEO	0
BLANKING OF DESIGNATED AREAS	1, 3
BLINKING OF DESIGNATED AREAS	2
REVERSING OF DESIGNATED AREAS	4
REVERSING AND BLANKING OF DESIGNATED AREAS	5, 7
REVERSING AND BLINKING OF DESIGNATED AREAS	6

OPERATOR'S QUICK REFERENCE GUIDE TO CTRL KEY SEQUENCE

Keys Used: CTRL/(ASCII Character)

			FUNCTION		GRAPHIC CHARACTER SET					
			0	1	2	3	4	5	6	7
HEX	4321	765	000	001			100	101		
0	0000		NUL	DLE			@	P		
1	0001		SOH	DC1			A	Q		
2	0010		STX	DC2			B	R		
3	0011		ETX	DC3			C	S		
4	0100		EOT	DC4			D	T		
5	0101		ENQ	NAK			E	U		
6	0110		ACK	SYN			F	V		
7	0111		BEEP	ETB			G	W		
8	1000		(←) BS	CAN			H	X		
9	1001		(SKIP) HT	EM			I	Y		
A	1010		LF(↓)	SUB			J	Z		
B	1011		VT(↑)	ESC			K	[		
C	1100		FF(→)	FS			L	\		
D	1101		CR	GS			M	]		
E	1110		SO	(HOME) RS			N	^		
F	1111		SI	(NEW LINE) US			O	-		

OPERATOR'S QUICK REFERENCE GUIDE

TO GRAPHIC CHARACTER SET CODES

			FUNCTION		GRAPHIC CHARACTER SET					
HEX			0	1	2	3	4	5	6	7
	BITS 4321	BITS 765	000	001	010	011	100	101	110	111
0	0000		NUL	DLE		0	@	P	`	p
1	0001		SOH	DC1	!	1	A	Q	a	q
2	0010		STX	DC2	"	2	B	R	b	r
3	0011		ETX	DC3	#	3	C	S	c	s
4	0100		EOT	DC4	$	4	D	T	d	t
5	0101		ENQ	NAK	%	5	E	U	e	u
6	0110		ACK	SYN	&	6	F	V	f	v
7	0111		BEEP	ETB	'	7	G	W	g	w
8	1000		BS (←)	CAN	(	8	H	X	h	x
9	1001		(SKIP) HT	EM	)	9	I	Y	i	y
A	1010		LF (↓)	SUB	*	:	J	Z	j	z
B	1011		VT (↑)	ESC	+	;	K	[	k	{
C	1100		FF (→)	FS	,	<	L	\	l	¦
D	1101		CR	GS	-	=	M	]	m	}
E	1110		SO	(HOME) RS	.	>	N	^	n	~
F	1111		SI	(NEW LINE)US	/	?	O	_	o	DEL

Cursor Control

12 11 version 1

OPERATOR'S QUICK REFERENCE GUIDE TO ESCAPE SEQUENCE

Keys Used: ESC/SHIFT/(ASCII Character) or ESC/(ASCII Character)

	ESCAPE SEQUENCE					
HEX	2	3	4	5	6	7
0		0	@ PRINT w/o PROT	P PRINT PAGE	`	p
1	!	1	A BUFF PRNTM*	Q INSERT CHAR	a	q SET INS MODE
2	" KBD ENA	2	B SET BLOCK	R DELETE LINE	b	r CLEAR INS MODE
3	# KBD DISA	3	C SET CONV	S SEND MSG	c	s
4	$	4 SEND FG LINE	D SET DUPLH or F	T ERASE LINE PERS*	d	t
5	%	5 SEND FG PAGE	E IN-SERT LINE	U SET PGM MODE	e	u CLEAR PGM MODE
6.	& SET PROTM	6 SEND ALL LINE	F	V	f	v SET AUTO PG
7	' CLEAR PROTM	7 SEND ALL PAGE	G ATTRIB CONTROL *	W DELETE CHAR	g	w CLEAR AUTO PG
8	(CLEAR WPROT	8	H	X CLEAR PGM MODE	h	x
9	) SET WPROT	9	I BACK TAB	Y ERASE PAGE FG	i TAB (SKIP)	y ERS PG TO NULL
A	* CLEAR ALL NULL	: CLEAR ALL NULL	J PAGE BACK	Z	j	z
B	+ CLR FG SP/PERS	; CLR FG SP/PERS	K PAGE FWD	[	k	{
C	, CLR TO PROT SP	<	L UNFORM PRNT	\	l	|
D	- LOAD PRC *	= LOAD CURSOR *	M	]	m	}
E	. CHANGE PERS *	>	N	^	n	~
F	/ READ PRC *	? READ CURSOR *	O	-	o DPLY PERS *	DEL

*Multiple Characters Required

PRC Page Row & Collum

OPERATOR'S QUICK REFERENCE GUIDE TO ABSOLUTE CURSOR POSITIONING SEQUENCE

1 – 80
24

Keys Used: ESC/YX* code)

X or Y	ASCII CODE	HEX CODE	X or Y	ASCII CODE	HEX CODE	X or Y	ASCII CODE	HEX CODE
1	SPACE	20	28	;	3B	55	V	56
2	!	21	29	<	3C	56	W	57
3	"	22	30	=	3D	57	X	58
4	#	23	31	>	3E	58	Y	59
5	$	24	32	?	3F	59	Z	5A
6	%	25	33	@	40	60	[	5B
7	&	26	34	A	41	61	\	5C
8	'	27	35	B	42	62	]	5D
9	(	28	36	C	43	63	^	5E
10	)	29	37	D	44	64	_	5F
11	*	2A	38	E	45	65	`	60
12	+	2B	39	F	46	66	a	61
13	,	2C	40	G	47	67	b	62
14	-	2D	41	H	48	68	c	63
15	.	2E	42	I	49	69	d	64
16	/	2F	43	J	4A	70	e	65
17	0	30	44	K	4B	71	f	66
18	1	31	45	L	4C	72	g	67
19	2	32	46	M	4D	73	h	68
20	3	33	47	N	4E	74	i	69
21	4	34	48	O	4F	75	j	6A
22	5	35	49	P	50	76	k	6B
23	6	36	50	Q	51	77	l	6C
24	7	37	51	R	52	78	m	6D
25	8	38	52	S	53	79	n	6E
26	9	39	53	T	54	80	o	6F
27	:	3A	54	U	55			

*Use ASCII characters associated with the YX (vertical-horizontal) coordinates desired.

APPENDIX B

ADM-31

IC PART NUMBERS AND PIN ASSIGNMENTS

1C PART NUMBERS AND PIN ASSIGNMENTS

PART NO.	TYPE	PAGE	DESCRIPTION
128348-04	74H04		HEX 1-Input NAND
128348-06	7406		HEX 1 NAND Buff/Driver (O.C.)
128348-21	7421		Dual 4-Input AND
128348-154	74154		4-to-16 Decoder
128348-159	74159		4-to-16 Decoder (O.C.)
128348-166	74166		8-Bit Shift Register
128348-555	NE555		555 Timer
128348-1488	75188		RS-232-C Quad Line Driver
128348-1489	75189		RS-232-C Quad Line Receiver
128348-3648	DS3648		Multiple Driver 3-State
128348-2012	2012		1024-Bit Static RAM 500NS
128348-5016	5016		Dual Baud Rate Generator
128348-5027	5027		CRT Video Timer-Controller
128348-79M05	79M05		Negative Voltage Regulator - 5V
128348-8728	8728		Quad Bus Receiver 3-State, Non Inv
128348-8795	8795		HEX Buffer 3-State, Non Inv
129466-4027	4027		4096x1 Dynamic RAM, 250NS
129467-00	74LS00		Quad 2-Input NAND
129467-02	74LS02		Quad 2-Input NOR
129467-08	74LS08		Quad 2-Input AND
129467-10	74LS10		Triple 3-Input NAND
129467-11	74LS11		Triple 3-Input AND

1C PART NUMBERS AND PIN ASSIGNMENTS (cont'd)

PART NO.	TYPE	PAGE	DESCRIPTION
129467-20	74LS20		Dual 4-Input NAND
129467-30	74LS30		Single 8-Input NAND
129467-32	74LS32		Quad 2-Input OR
129467-74	74LS74		Dual D-Type Pos Edge Trig FF
129467-86	74LS86		Quad 2-Input Excl OR
129467-138	74LS138		3-to-8 Line Decoder/MUX
129467-151	74LS151		8-to-1 Multiplexer
129467-157	74LS157		Quad 2-to-1 Line MUX
129467-161	74LS161		4-Bit Binary Counter, with Dir Clr
129467-175	74SL175		Quad D-Type FF
129467-283	74LS282		4-Bit Binary Adder with Carry
129498-01	MCT2		Optical Isolator
129753	82S123		32x8 PROM 3-State Output
129762-3			19.584 MHz Clock Oscillaotr
129824-6800	6800		Microprocessor
129824-6821	6821		Peripheral Interface Adapter
129824-6850	6850		Asynchronous Communications Interface Adapter
129842-6875	6875		Two-Phase Clock Generator/Driver
129826-05	74S05		HEX 1-Input NAND (O.C.)
129826-37	74S37		Quad 2-Input NAND
129826-74	74S74		Dual D-Type Pos Edge Trig FF
129827	2716		2048x8 Erasable PROM 3-State Output
129861	2716		ROM Character Generator

APPENDIX C

MONITOR

(TTL DATA DISPLAY 120/150)

SERVICE MANUAL

TTL DATA DISPLAY
120/150

5-017-1024

REV. A

July, 1978

Ball Electronic Display Division

BALL ELECTRONIC DISPLAY DIVISION P.O. BOX 43376 • ST. PAUL, MINNESOTA 55164 • TELEPHONE: (612) 786-8900 • TWX: 910-563-3552

CONTENTS

			Page
	ILLUSTRATIONS AND TABLES		iii
PART I	OPERATING DATA		1
Section			
1.	GENERAL INFORMATION		
	1.1	Monitor Description	1-1
	1.2	Customer Input Signal Requirements	1-1
	1.2.1	PWA Signal Edge Connector	1-1
	1.2.2	Video	1-1
	1.2.3	Horizontal Drive	1-4
	1.2.4	Vertical Drive	1-4
	1.2.5	Skip Scan	1-4
	1.3	Input Power Requirement	1-4
	1.3.1	AC Input Power Requirement	1-4
	1.3.1.1	Input Power Connector	1-4
	1.3.1.2	Input Voltage	1-4
	1.3.1.3	Input Power	1-4
	1.3.1.4	Input Frequency	1-6
	1.3.2	DC Input Power Requirements	1-6
	1.3.2.1	Input Power Connector	1-6
	1.3.2.2	Input Voltage	1-6
	1.3.2.3	AC Ripple	1-6
	1.3.2.4	Input Current	1-6
	1.4	Display Monitor Electrical Characteristics	1-6
	1.4.1	Video Amplifier	1-6
	1.4.2	Horizontal Electronics	1-8
	1.4.3	Vertical Electronics	1-8
	1.4.4	Skip Scan Electronics	1-9
	1.5	CRT Display Characteristics	1-9
	1.5.1	CRT Resolution	1-9
	1.5.2	Geometric Distortion	1-9
	1.5.3	Linearity	1-9
	1.5.4	Jitter	1-9
	1.6	Mechanical Specifications	1-10
	1.7	Environmental Specifications	1-10
	1.8	Reliability	1-10
	1.9	X-Ray Radiation	1-10
	1.10	User Operating Controls	1-13
	1.10.2	Internal Controls	1-13
2	INSTALLATION		2-1
	2.1	Mechanical	2-1
	2.2	Electrical	2-1
	2.2.1	AC Input	2-1
	2.2.2	DC Input	2-1
	2.3	Location	2-1
	2.4	Ground Techniques	2-1
	2.5	Video Lead In Considerations	2-1

CONTENTS (Cont.)

Section			Page
3	OPERATION		3-1
	3.1	General	3-1
	3.2	Brightness Adjust	3-1
	3.3	Contrast Adjust	3-1
PART II	SERVICE DATA		4
4	THEORY OF OPERATION		4-1
	4.1	Video Amplifier	4-1
	4.2	Vertical Electronics	4-1
	4.3	Horizontal Electronics	4-6
	4.3.1	Horizontal Deflection	4-6
	4.3.2	CRT Operating Voltages	4-8
	4.4	X-Ray Protection Electronics	4-8
	4.5	Dymamic Focus Electronics	4-9
	4.6	Low Voltage Regulated Supply	4-9
5	ADJUSTMENT AND MAINTENANCE		5-1
	5.1	General	5-1
	5.2	Initial Turn-On	5-1
	5.3	Power Supply Adjustment	5-1
	5.4	Vertical Electronics	5-1
	5.4.1	Vertical Sync Adjust	5-1
	5.4.2	Vertical Linearity and Height Adjust	5-1
	5.4.3	Skip Scan Adjust	5-1
	5.5	Horizontal Electronics	5-2
	5.5.1	Width Adjustment	5-2
	5.5.2	Horizontal Centering Adjustment	5-2
	5.6	Raster Centering	5-2
	5.7	Focus	5-2
	5.8	Dynamic Focus	5-2
	5.9	Brightness and Contrast	5-3
	5.10	Troubleshooting Guide	5-3
6	SERVICE DATA		6-1
	6.1	General	6-1
	6.2	Ordering Parts	6-1
	6.3	Returning Parts	6-1
	6.4	Waveforms	6-2
	6.5	Board Assembly	6-2
	6.6	Component Replacement Parts Affecting Product Safety	6-2
	6.7	Chassis Mounted Component Parts List	6-2

CONTENTS (Cont.)

		Page
ILLUSTRATIONS		
1.1	Horizontal/Video Timing	1-2
1.2	Vertical/Video Timing	1-3
1.3	Skip Scan/Horizontal Timing	1-5
1.4	Video Amplifier Input Impedance	1-6
1.5	Video Amplifier Input Transfer Function	1-7
1.6	25V Pulse Response	1-7
1.7	Horizontal Input Impedance	1-8
1.8	Vertical Input Impedance	1-8
1.9	Skip Scan Input Impedance	1-9
1.10	TTL 120, 0° and TTL 150, 5° Tilt	1-12
2.1	PWA Interface Connection and Signal Output	2-2
2.2	Wiring Data For J1 Mating Connector	2-3
4.1	Optional Video Amplifier Schematic	4-2
4.2	TTL 120/150 Block Diagram	4-3
4.3	Yoke Current Waveform	4-4
4.4	Block Diagram of Vertical Amplifier	4-5
4.5	Horizontal Timing Diagram of U102 & U103	4-7
4.6	Power Supply Block Diagram	4-10
5.1	Dynamic Focus Waveform	5-2
6.1	TTL 120 Schematic	6-5
6.2	TTL 120 Main PWA Component Layout and Parts List	6-6
6.3	TTL 150 Schematic	6-7
6.4	TTL 150 Main PWA Component Layout and Parts List	6-8
6.5	TTL 120/150 Waveforms	6-9
6.6	Component Layout Low Voltage Regulator PWA	6-10
6.7	Component Layout for Dynamic Focus PWA	6-11
6.8	Skip Scan Component Layout and Parts List	6-12
TABLES		
1-1	Mechanical Specifications	1-11
2-1	Mounting Data	2-1

PART I

OPERATING DATA

This section of the Service Manual provides data concerning the specifications, installation and operation of the TTL120/150 Data Monitor.

SECTION 1

GENERAL INFORMATION

1.1 MONITOR DESCRIPTION

The TTL 120/150 Data Monitor is a solid state raster scan display for data terminal application. The Monitor is designed for high quality display of alphanumeric dot characters.

The Data Monitor is available with either a 12 inch or a 15 inch diagonal screen size CRT and each monitor uses a CRT with 110° deflection angle which results in a very dense package.

The Data Monitor requires three separate TTL compatible input signals for operation, they are 1) vertical drive, 2) horizontal drive and 3) video. These three separate TTL input signals eliminate costly redundancy associated with the mixing and stripping operation required in a composite (single input) monitor.

The unit is available with the following factory installed options. The TTL compatible skip scan option provides for variable spacing between character rows while using only one scan line per space. The dynamic focus PWA option is available to provide an overall focus improvement from the conventional static focus control. The horizontal frequency can be altered from 15.25kHz to 21kHz. The main PWA is available with or without a brightness control, with or without contrast control and the video termination can be changed.

1.2 CUSTOMER INPUT SIGNAL REQUIREMENTS

1.2.1 PWA Signal Edge Connector (Customer Supplied)

Viking	No. 2VK10S/1-2
Amphenol	No. 22S-21031-101
Cinch	No. 250-10-30-170
Ball EDD	No. 1-039-0119

(Refer to Figure 2.1 for wiring detail of this connector)

1.2.2 Video

Amplitude: High - 4.0V ±2.0V into an external 500Ω or less contrast control.
2.0V max at J101-8 to prevent video amplifier saturation.
Low - 0.0V ±0.4V
Polarity: White High
Pulse Width: 40ns min
Rise and Fall Time: Less than 12ns (10% to 90%)
Video Blanking: Refer to Figures 1.1 and 1.2

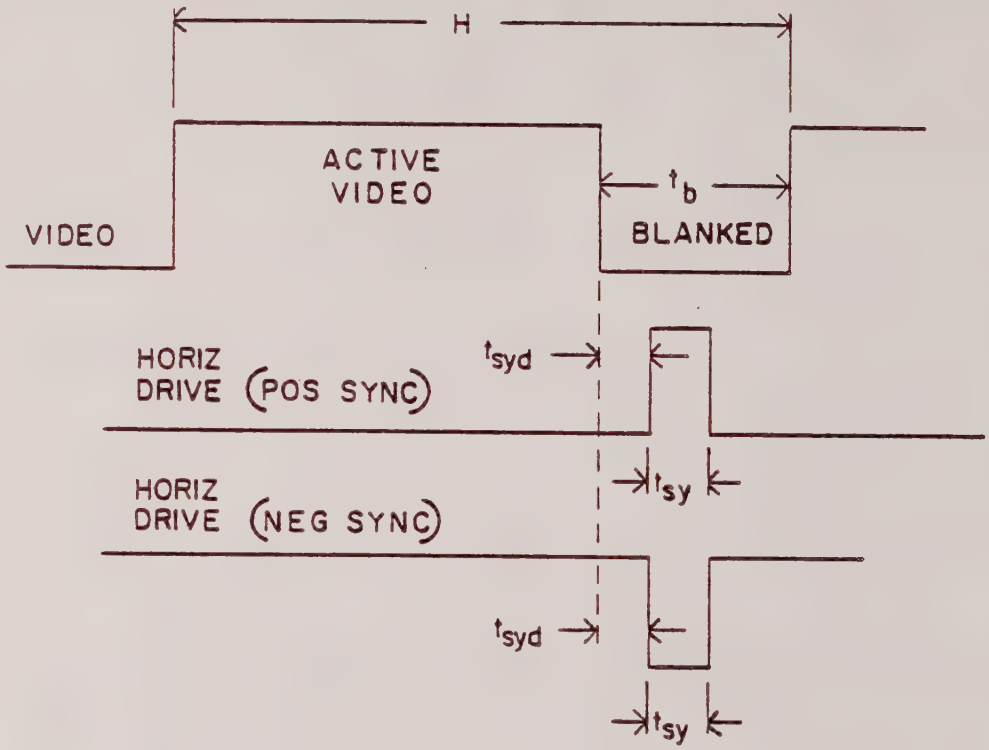

H = time from start of one line to the start of the next line

$$\frac{1}{21\text{kHz}} \leq H \leq \frac{1}{15.25\text{kHz}}$$

t_{syd} = sync delay time: $-1\mu s \leq t_{syd} \leq 3\mu s$

t_{sy} = sync pulse width (per 1.2.3): $2.5\mu s \leq t_{sy} \leq 30\mu s$

t_b = total blanking time = 12.7μs nom
10μs min

NOTE

PREFERABLY THE SYNC PULSE WIDTH SHOULD FALL WITHIN THE TOTAL BLANKING TIME IN ORDER TO MINIMIZE CROSSTALK BETWEEN HORIZONTAL DRIVE AND ACTIVE VIDEO.

EXAMPLE: $t_{syd} \geq 0$

and

$t_{syd} + t_{sy} \leq t_b$

Figure 1.1 Horizontal/Video Timing

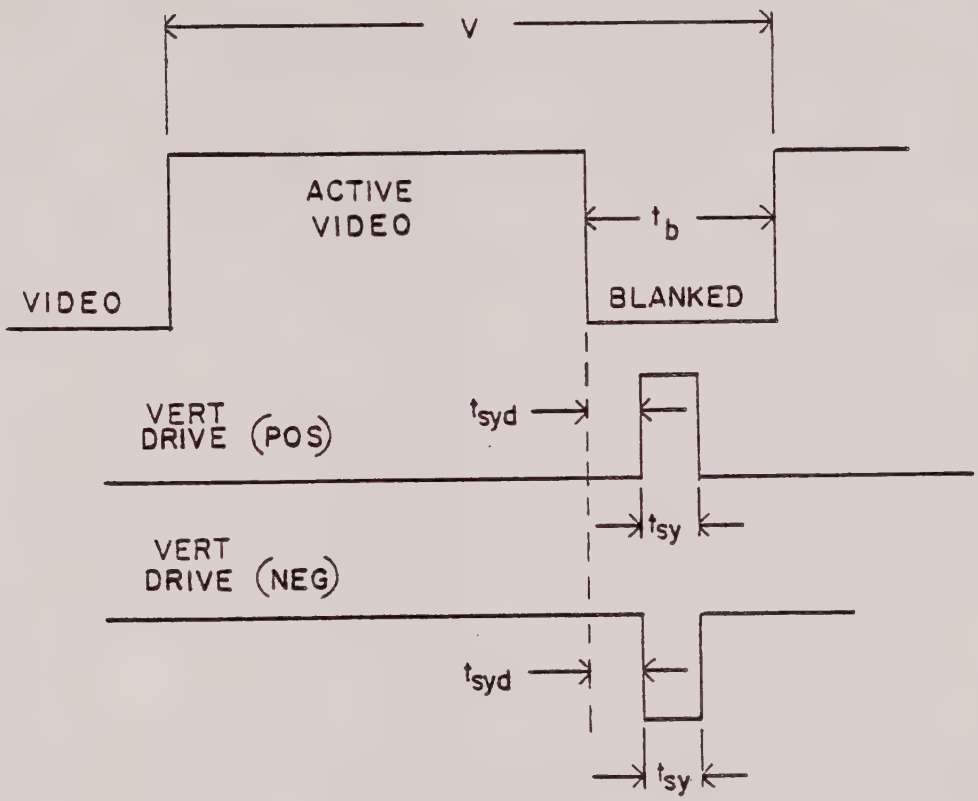

V = time from start of one field to the start of the next field

$$\frac{1}{63Hz} \leq V \leq \frac{1}{46Hz}$$

t_{sy} = sync pulse width per 1.2.4: $75\mu s \leq t_{sy} \leq 1.4ms$

t_b = total blanking time = 2ms nom
900µs min

t_{syd} = should be selected for best video centering within the raster according to:

$$t_{syd} = \frac{t_b - 900\mu s}{2}$$

Example: t_b = 2ms
t_{syd} = 550µs

Figure 1.2 Vertical/Video Timing

1.2.3 Horizontal Drive

Horizontal Frequency: (f_H): 15,250Hz min to 21,000Hz max
15,750Hz ±500Hz (Standard)
Amplitude: High - 4.0V ±1.5V
Low - 0.0V ±0.4V
Polarity: Standard - Positive edge triggering
Optional - Negative edge triggering
Pulse Width (t_{sy}): 2.5µs min to 30µs max
Rise and Fall Time: Less than 100ns (10% to 90%)
Horizontal/Video Timing: Refer to Figure 1.1

1.2.4 Vertical Drive

Vertical Frequency (f_V): 46Hz min to 63Hz max
Amplitude: High - 4.0V ±1.5V
Low - 0.0V ±0.4V
Polarity: Standard - Negative edge triggering
Optional - Positive edge triggering
Pulse Width (t_{sy}): 75µs min to 1.4ms max
Rise and Fall Time: Less than 100ns (10% to 90%)
Vertical/Video Time: Refer to Figure 1.2

1.2.5 Skip Scan

Amplitude: High - 4.0V ±1.5V
Low - 0.0V ±0.4V
Polarity: Skip High
Pulse Width (t_{ss}): 3µs min to 10µs max
Rise and Fall Time: Less than 100ns (10% to 90%)
Skip Scan/Horizontal Timing: Refer to Figure 1.3

1.3 INPUT POWER REQUIREMENT

1.3.1 AC Input Power Requirement

1.3.1.1 Input Power Connector

A 9 pin male connector shell (Molex 03-06-1092) with female contacts (Molex 4529) is required to mate with J1 of the AC power supply. Refer to Figure 2.2 for wiring detail of the J1 mating connector.

1.3.1.2 Input Voltage

120V Nominal: 105V RMS min to 130V RMS max
220V Nominal: 198V RMS min to 242V RMS max
240V Nominal: 210V RMS min to 264V RMS max

1.3.1.3 Input Power

Nominal Wattage: 50 watts @ 120VAC, 220VAC or 240VAC
Maximum Wattage: 65 watts @ 120VAC, 220VAC or 240VAC

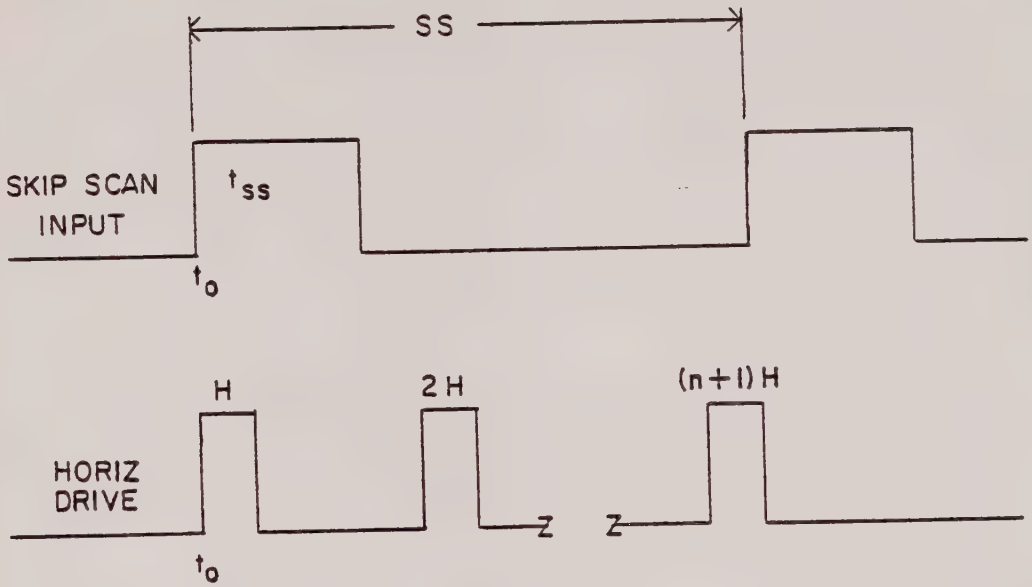

SS = Time between skip scan pulses nH which will conform to the number of lines (n-1) in the character matrix plus one line (H) for vertical setting

t_{ss} = Skip scan pulse width (per 1.2.5) $3\mu s \leq t_{ss} \leq 10\mu s$

The leading edges of the skip scan input and horizontal drive should be coincident at time t_o.

Figure 1.3 Skip Scan/Horizontal Timing

1.3.1.4 Input Frequency

49Hz min to 61Hz max

1.3.2 DC Input Power Requirements (Optional)

1.3.2.1 Input Power Connector

The DC input voltage is applied through pin 7 of J101 on the main PWA.

1.3.2.2 Input Voltage

+55VDC ±2%, with line, load and temperature.

1.3.2.3 AC Ripple

100mV p-p max for refresh synchronous with power frequency
35mV p-p max for refresh non-synchronous with power frequency

1.3.2.4 Input Current

Average Current Nominal:	0.5A
Average Current Maximum:	0.7A
Maximum Peak Current from Horizontal and Vertical AC Components:	1A

1.4 DISPLAY MONITOR ELECTRICAL CHARACTERISTICS

1.4.1 Video Amplifier

Input Impedance: Refer to Figure 1-4

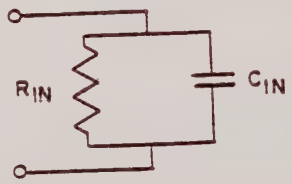

R_{IN} (Unterminated) = 5k typ; 3K min
C_{IN} = 20pF typ; 30pF max

Figure 1.4 Video Amplifier Input Impedance

Input Transfer Function (typ): Refer to Figure 1.5

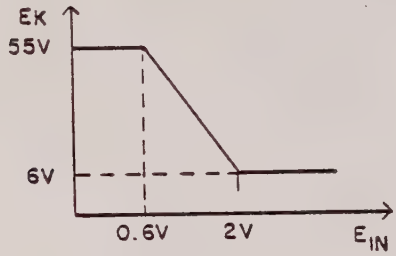

EK = Cathode Voltage
E_{IN} = Video Signal at J101-8

Figure 1.5 Video Amplifier Input Transfer Function

Bandwidth: DC 22MHz @ -3db typ; 20MHz @ -3db min

25V Pulse Response: Refer to Figure 1.6

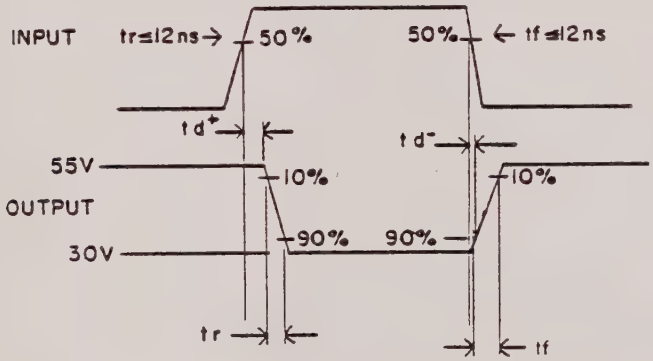

$t_{d^+}=t_{d^-}=10ns$ typ , 12ns max
$t_r=18ns$ typ, 20ns max
$t_f=28ns$ typ, 35ns max
$t_f=18ns$ typ, 20ns max
90%-30%

Figure 1.6 25V Pulse Response

1.4.2 Horizontal Electronics

Input Impedance: Refer to Figure 1.7

Figure 1.7 Horizontal Input Impedance

Retrace Time: 8.2µs typ; 9.0µs max
Horizontal Centering: Adjustment range is equal to $*t_{CTRG}$ = 1.1(R153+R159)C153 which translates to 8µs min to 28µs max

*t = Time *CTRG = Centering

1.4.3 Vertical Electronics

Vertical Input Impedance: Refer to Figure 1.8

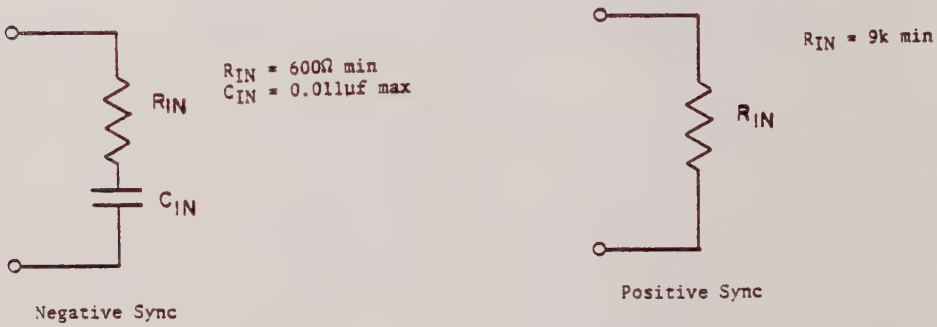

Figure 1.8 Vertical Input Impedance

Retrace Time: 700µs typ; 820µs max

1.4.4 Skip Scan Electronics

Input Impedance: Refer to Figure 1.9

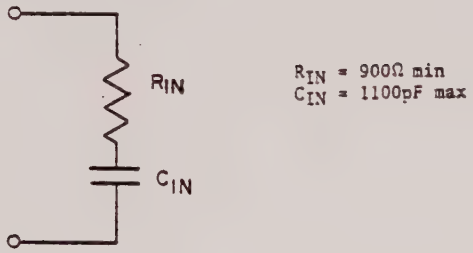

Figure 1.9 Skip Scan Input Impedance

Vertical Amplifier Delay Plus Settling Time: 60μs max to 90% of final value

1.5 CRT DISPLAY CHARACTERISTICS

1.5.1 CRT Resolution (without bonded panel)

Phosphor	*Resolution (TV Lines)	
	Center	Corner
P4	1000 @ 30fL	900 @ 30fL
P39	1000 @ 15fL	900 @ 15fL

*Resolution is measured in accordance with EIA RS-375 except Burst Modulation (or depth of modulation) is adjusted for 100%.

1.5.2 Geometric Distortion

The perimeter of a full field of characters approaches an ideal rectangle of 4 by 3 aspect ratio to within ±1.5% of rectangle height.

1.5.3 Linearity

Character height or width shall be within 10% of that of any adjacent character and within 20% of that for any character on the screen.

1.5.4 Jitter

Display jitter as a function of magnetic interference from the power transformer is:

60Hz - 0.006 inch p-p max
50Hz - 0.008 inch p-p max

1.6 MECHANICAL SPECIFICATIONS

Table 1-1 and Figure 1.10 lists the mechanical specifications for the TTL-120/150 Data Monitor. For further information, contact our General Sales Offices. They are:

Addison, Illinois (312) 279-7400
Ocean, New Jersey (201) 922-2800
Santa Clara, California (408) 244-1474
Upland, California (714) 985-7110
Lewisville, Texas (214) 436-2383

1.7 ENVIRONMENTAL SPECIFICATIONS

	Operating Range	Storage Range
Ambient Temperature	5°C to 55°C	-40°C to 65°C
Humidity (Non-Condensing)	5% to 80%	5% to 90%
Altitude	Up to 10,000Ft. (3048M)	Up to 30,000Ft. (9144M)

1.8 RELIABILITY

The calculated MTBF excluding CRT at 55°C is 24,500 hours. The calculations are based on MIL 217A assuming the military K Factors are "ground base equipment."

1.9 X-RAY RADIATION

The TTL 120/150 Data Monitor complies with the Federal Regulation for Radiation Control as required by the radiation Control for Health and Safety Act of 1968, and as implemented by Title 21, Subchapter J of the Code of Federal Regulation.

These regulations place certain requirements upon manufacturers of products which can emit x-rays under some conditions of operation or failure. This includes CRT data display monitors.

Certification of compliance with radiation regulations is shown by a label attached to each monitor. The user is responsible for labeling his product in a similar fashion or in making the DHEW label easily visible from the outside of the enclosure. The regulations state that "This (certification) information shall be provided in the form of a tag or label permanently affixed or inscribed on such product so as to be legible and readily accessible to view when the product is fully assembled for use..." Each monitor is supplied with an extra label attached to the CRT. The user will remove this label and use it as stated above.

DIMENSION (Inches/Millimeters)

MODEL		TILT (°)	A (in/mm)	B	C	Weight (Lbs/Kg)	OUTLINE DWG
TTL-120B	AC	0	4.51/115	4.72/120	9.03/229	15/6.8	2-030-0394
TTL-120B	AC	7½	4.70/119	4.11/104	8.95/227	15/6.8	3-030-0391
TTL-120A	AC	0	4.58/116	2.97/75	9.09/231	14.5/6.6	2-030-0388
TTL-120A	AC	5	4.72/120	2.57/65	9.06/230	14.5/6.6	2-030-0403
TTL-120A	AC	7½	4.78/121	2.37/60	9.01/229	14.5/6.6	2-030-0406
TTL-120A	AC	10	4.80/122	2.16/55	8.95/227	14.5/6.6	2-030-0390
TTL-120D	AC	0	4.66/118	5.30/135	9.20/234	15.5/7.0	2-030-0393
TTL-120D	AC	10	4.90/124	4.78/121	9.02/229	15.5/7.0	2-030-0392
TTL-150A	AC	0	5.33/135	2.38/60	10.66/271	18.5/8.4	2-030-0395
TTL-150A	AC	5	5.42/138	1.91/48	10.62/270	18.5/8.4	2-030-0389
TTL-150A	AC	7½	5.47/139	1.67/42	10.57/268	18.5/8.4	2-030-0405
TTL-150D	AC	0	5.30/135	5.40/137	10.62/270	19.75/9.0	2-030-0387
TTL-150D	AC	5	5.92/150	4.58/116	11.03/280	19.75/9.0	2-030-0387

NOTES:

1. For DC models subtract 4 lbs/1.8kg
2. Dimensions based on standard unit with plain face CRT.

Table 1-1 Mechanical Specifications

DIMENSIONS FIGURE 1-12

TTL-120 12-INCH DIAGONAL A

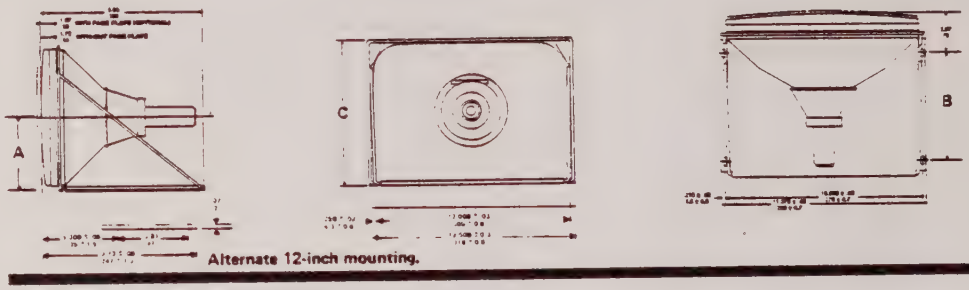

TTL-150 15-INCH DIAGONAL A

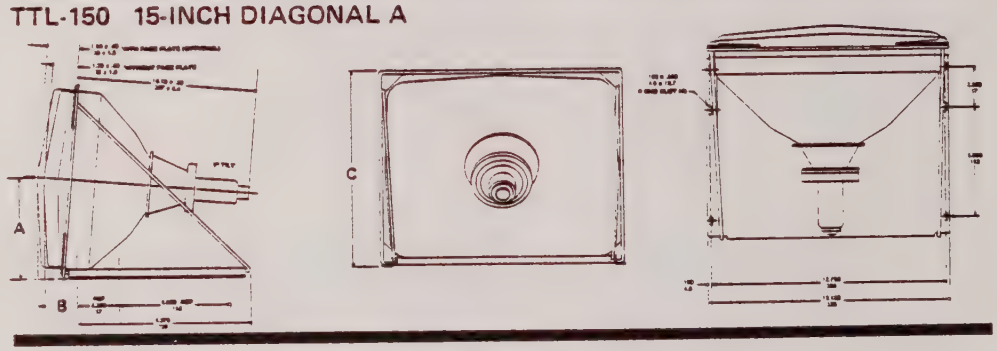

TTL-150 15-INCH DIAGONAL* D

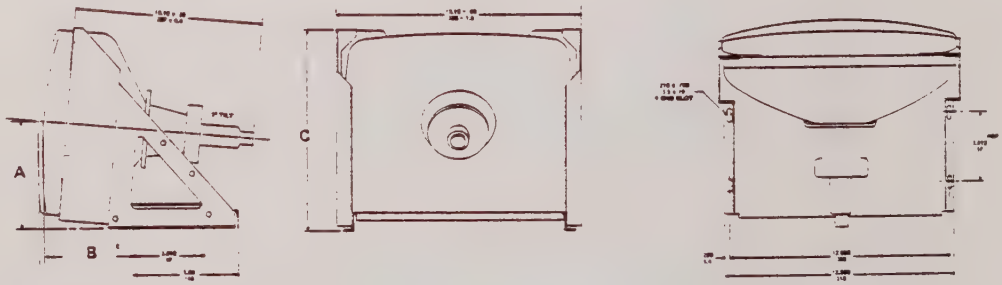

*Alternate 15-inch frame style.

Figure 1.10 TTL 120, 0° and TTL 150 5° Tilt Dimensions

1.10 USER OPERATING CONTROLS

1.10.1 External Controls

The only external control required for operation of the standard TTL 120/150 display unit is a contrast control. The impedance level of this control shall be no greater than 500Ω to keep frequency response limitations to a minimum.

An option is available where the contrast control can be placed on the PWA.

Another option is available, where the brightness control is removed from the PWA. A remote brightness control supplied by the customer is used and is connected to the PWA via J101.

1.10.2 Internal Controls

The following controls are mounted on the main PWA:

Width	Skip Height (Optional)
Horizontal Video Centering	Internal Contrast (Optional)
Vertical Sync	Brightness
Vertical Linearity	Focus
Height	Dynamic Focus (Located on Dynamic Focus PWA)

Section 2

INSTALLATION

2.1 MECHANICAL

Refer to Table 2-1 for the Display Monitor mounting data and to Section 1.6 for its mechanical specifications.

MODEL	MOUNTING DATA
TTL120B	4 Clinch Nuts
TTL120A	4 .188X.500 radius end slots
TTL120D	4 .218X.750 radius end slots
TTL150A	6 .188X.500 radius end slots

Table 2-1 Mounting Data

2.2 ELECTRICAL

2.2.1 AC Input

The TTL120/150 Data Monitor with a internal AC power supply operates from either a 120VAC or 220/240VAC source depending on the wiring of the AC mating connector (customer supplied) for J1. Refer to Figure 2.2 for wiring data of J1 mating connector.

2.2.2 DC Input

The TTL120/150 Display Monitor without an internal AC power supply is operated from an external +55VDC source. The DC input voltage of +55V is applied to pin 7 of J101.

2.3 LOCATION

The Display Monitor shall not be located in an area such that the operating ambient temperature exceeds +55°C.

2.4 GROUND TECHNIQUES

The Display Monitor is normally mounted in a system where the frame and chassis plate is an integral part of the system ground. The vertical/video ground and horizontal ground (located on pins 1 and 10 of J101) are tied to the chassis plate through a #6 tapping screw located at one corner of the PWA. Ground connections to the Display Monitor can then be made through the chassis mounting plate or via connections to pins 1 and 10 of J101. Refer to Figure 2.1 for Interface Connections.

2.5 VIDEO LEAD IN CONSIDERATIONS

For the best display, the video input line requires special consideration.

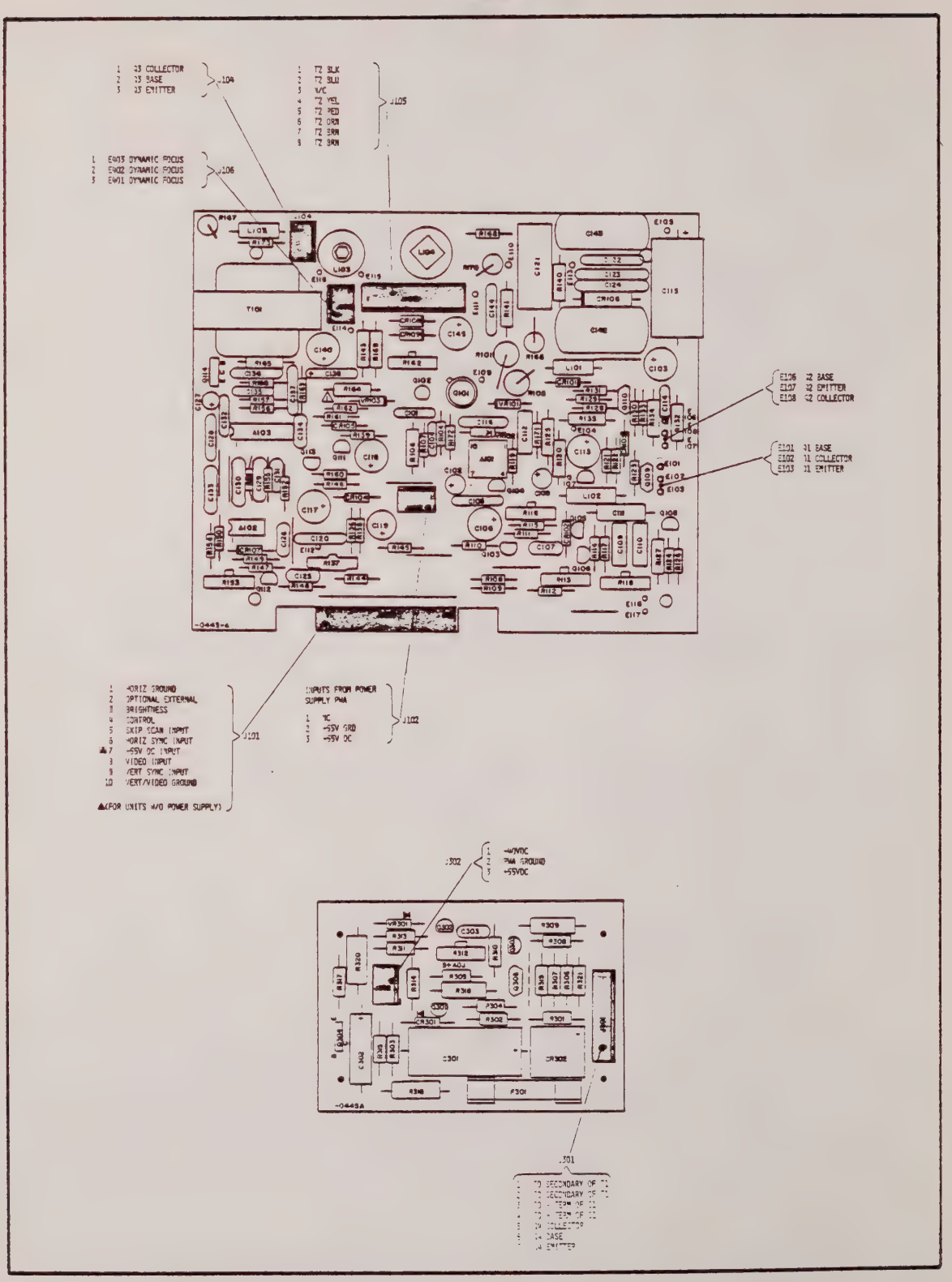

Figure 2.1 PWA Interface Connection and Signal Output

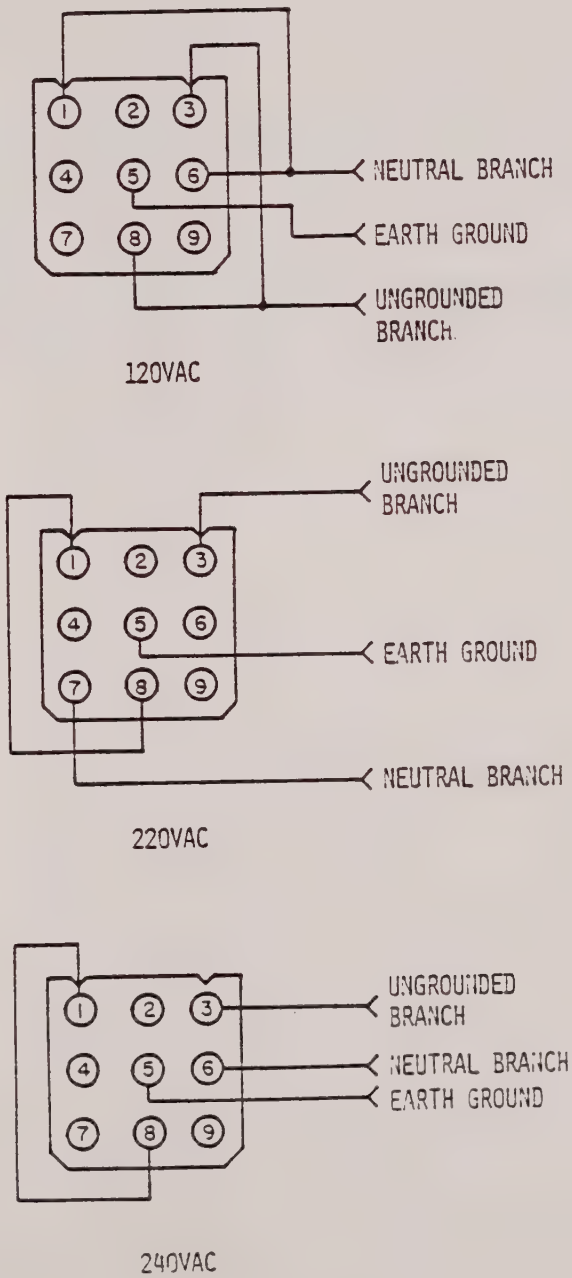

Figure 2.2 Wiring Data for J1 Mating Connector

1. To avoid capacitive coupling from adjacent lines, the video leads should be routed away from all other wiring and the horizontal sync width should not extend into the active video area (Refer to Figure 1.1).

   If this is not possible, a shielded or twisted pair video lead may become necessary.

2. The video line should be kept as short as possible in order to minimize line capacitance and the bandwidth limitation this capacitance imposes. Unfortunately low line capacitance is contradictory to a shielded or twisted pair line mentioned in item 1 above. To resolve this contradiction, a terminated system may have to be used, where by the video line is terminated in the characteristic impedance of the shielded (coaxial) or twisted pair line generally $50 \leq Z_o \leq 120\Omega$. This termination resistor is available on the Main PWA as an optional component.

Section 3

OPERATION

3.1 GENERAL

After power, video and drive signals have been applied to the Display Monitor, the contrast and brightness controls are adjusted for the best looking display.

3.2 BRIGHTNESS ADJUST

The brightness control is used to adjust the raster just beyond visual cutoff; in this manner, maximum contrast ratio is obtained when video is applied.

3.3 CONTRAST ADJUST

The contrast control is used to vary the data brightness level as dictated by ambient lighting conditions.

PART II

SERVICE DATA

Section 4 through 6 and the supplement are for qualified service personnel.

The TTL 120/150 has no end user serviceable parts inside. Refer service to qualified service personnel.

Section 4

THEORY OF OPERATION

4.1 VIDEO AMPLIFIER

Video amplification is provided by Q101 and Q102. Q101 and Q102 are connected in a cascode arrangement; Q102 operates as an emitter follower and Q101 operates in the common base configuration. This minimizes the Miller effect input capacitance and the defining breakdown parameter for Q101 becomes B_VCBO as opposed to B_VCEO for the common emitter configuration. This enables selection of a higher speed/lower breakdown transistor to be used in the video amplifier.

The video amplifier is normally off. That is, in the absence of a video input signal or with a signal level of less than 0.6V at J101-8, the CRT cathode voltage at the collector of Q101 will be at +55V. When the input signal exceeds 0.6V, the amplifier begins operation in the linear region and the CRT cathode voltage starts to decrease with a nominal voltage gain of 35 V/V.

The dynamic range capability of the amplifier is 48V which provides more than adequate head room to meet the normal viewing brightness requirement of 18 to 30 volts of modulation. Emitter degeneration resistor R106 stabilizes the gain against hfe variations and V_{BE} temperature variations. High frequency peaking is provided by C104 and L101 resulting in a nominal bandwidth of 22MHz. CR101 provides arc protection for Q101 by clamping the collector voltage to a maximum value of 55V.

Optional resistors R102, R103 and R174 (Refer to Figure 4.1) are used to tailor the video amplifier characteristics to meet certain performance requirements. R102 is a termination resistor used for those applications where the frequency limiting effects of the input cable capacitance must be minimized. R103 is a contrast control which can be provided as an internal adjustment while R174 is used to convert the video amplifier to a normally on Class A amplifier. R174 eliminates the initial 0.6V dead zone which normally exists and modifies the amplifier transfer characteristic (Refer to Figure 1.5) for compatibility with competitive monitors with Class A video amplifiers.

4.2 VERTICAL ELECTRONICS

The vertical electronics circuit consists of a positive sync inverter, a vertical oscillator, an emitter follower, a vertical output amplifier and the vertical deflection coil of the yoke. Refer to figure 4.2.

Q105 is a programmable unijunction transistor and operates as a relaxation sawtooth oscillator. The free running frequency range of 40Hz to 65Hz is governed by R115, C109, C110 and the voltage at the gate of Q105. CR102 provides temperature compensation for the free running frequency. Q105 operates like a switch; in the off condition, a ramp voltage is produced at the anode of Q105 (TP104). This ramp voltage will increase until the anode voltage exceeds the gate voltage and turns Q105 on to rapidly discharge the voltage across C109 and

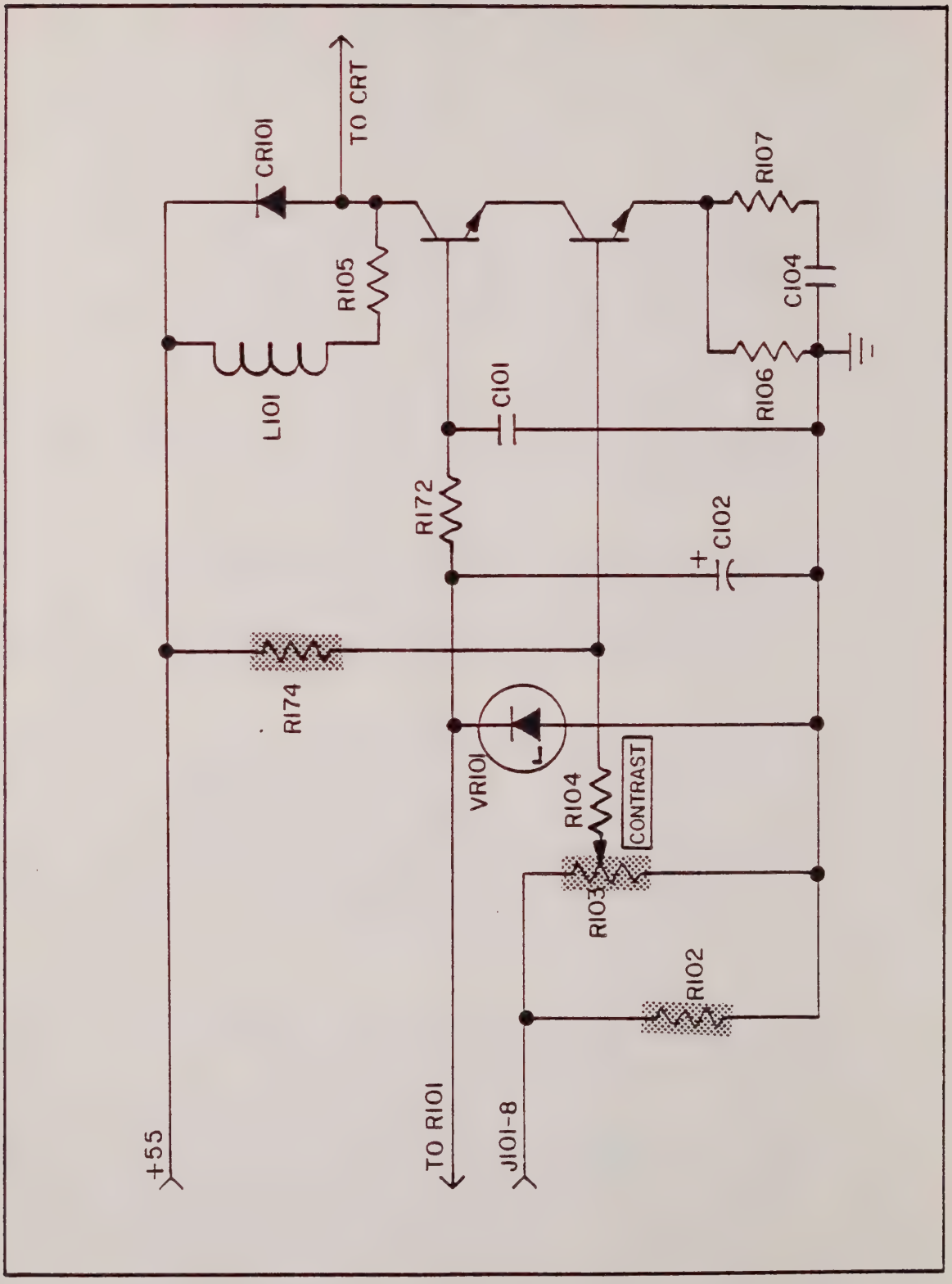

Figure 4.1 Optional Video Amplifier Schematic

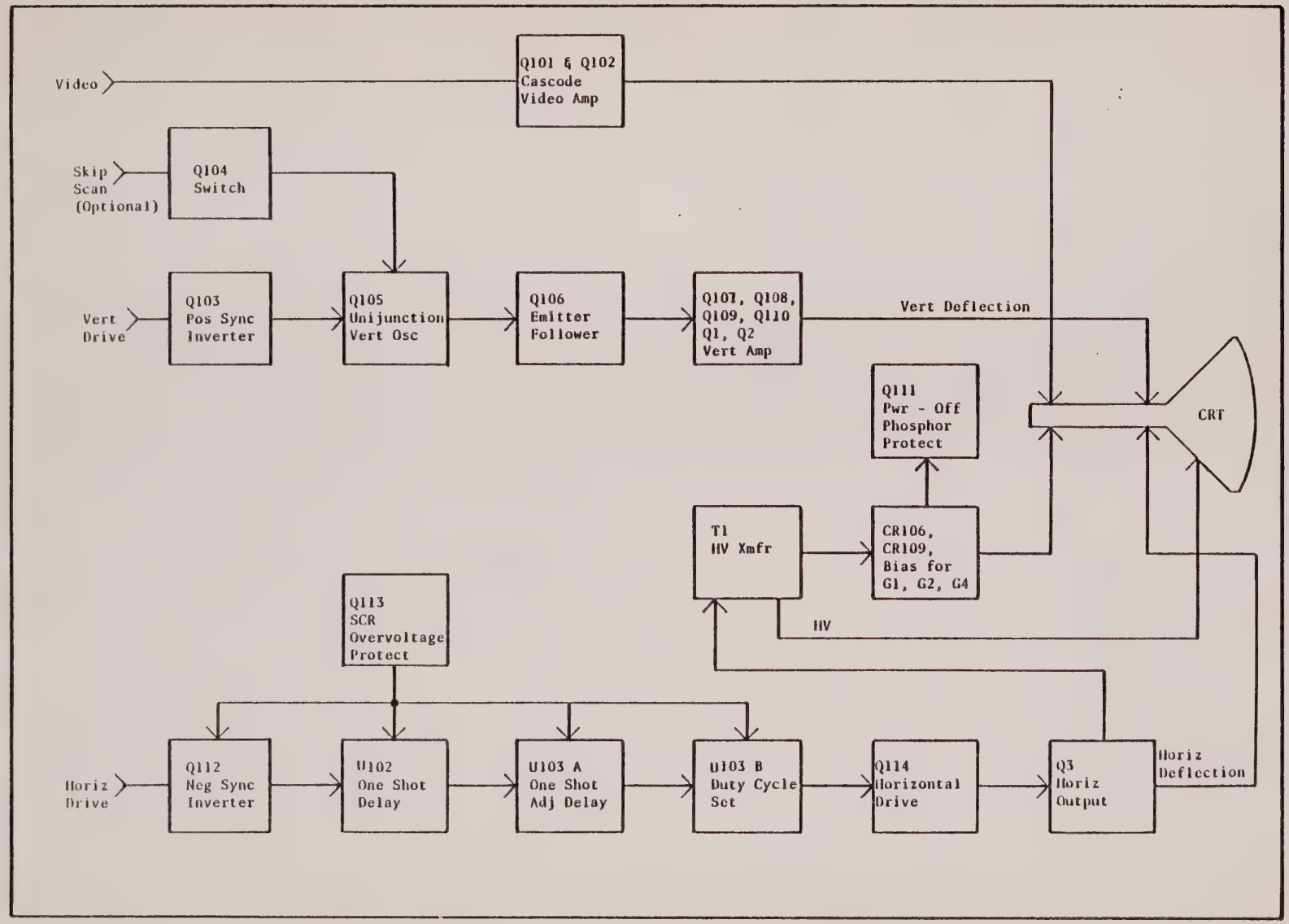

Figure 4.2 TTL120/150 Block Diagram

C110 through L102. The decay time is governed by the resonant frequency of the tuned circuit consisting of L102, C109 and C110.

The oscillator is synchronized by the application of a negative pulse at the gate of Q105. Negative sync at J101-9 is standard but positive sync can be accommodated with inverter Q103 by removing the negative sync jumper wire between R109 and C107 and adding the positive jumper wire between the collector of Q103 and C107. The negative sync pulse lowers the gate voltage and forces the oscillator to run at the incoming frequency as long as the vertical sync control R113 is adjusted to produce a free running frequency slightly lower than the incoming frequency.

Height control R116 varies the amplitude of the sawtooth voltage and subsequent raster height by controlling the effective B+ voltage applied to R115. The B+ voltage is established through the voltage divider action between R111, R112, R113, R116 and R119.

If a true sawtooth current waveform (linear ramp) is supplied to the yoke, the displayed video would be stretched at the top and bottom of the CRT because of the large difference between the faceplate radius curvature and the yoke center of deflection. As such, the sawtooth waveform must be modified to produce the classic "S" shaped yoke current waveform as shown in Figure 4.3.

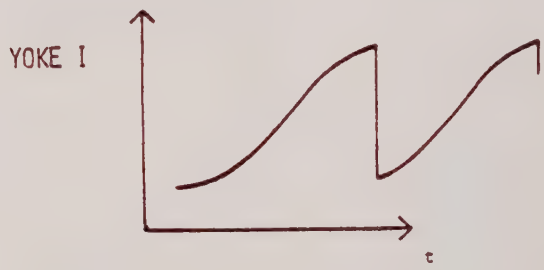

Figure 4.3 Yoke Current Waveform

The required "S" shaping is produced by linearity electronics Q106, R117, R118 and C110 in combination with the low frequency response limitation of the vertical amplifier. The linearity electronics modifies the sawtooth waveform at the emitter of Q106 by integrating this waveform through R117, R118 and C110 and inserting the resultant parabola in series with the ramp. Q106 is a darlington emitter follower which provides excellent isolation between the vertical oscillator and output amplifier.

The output amplifier consists of Q106 through Q110 and chassis mounted transistors Q1 and Q2. As indicated by Figure 4.4, the amplifier is of the closed loop variety which makes the input to output transfer function independent of the transistor parameters. The Class AB push-pull output stage eliminates the requirement for an output transformer or choke which is required for a Class A output amplifier. If one neglects the finite open loop gain, the input to

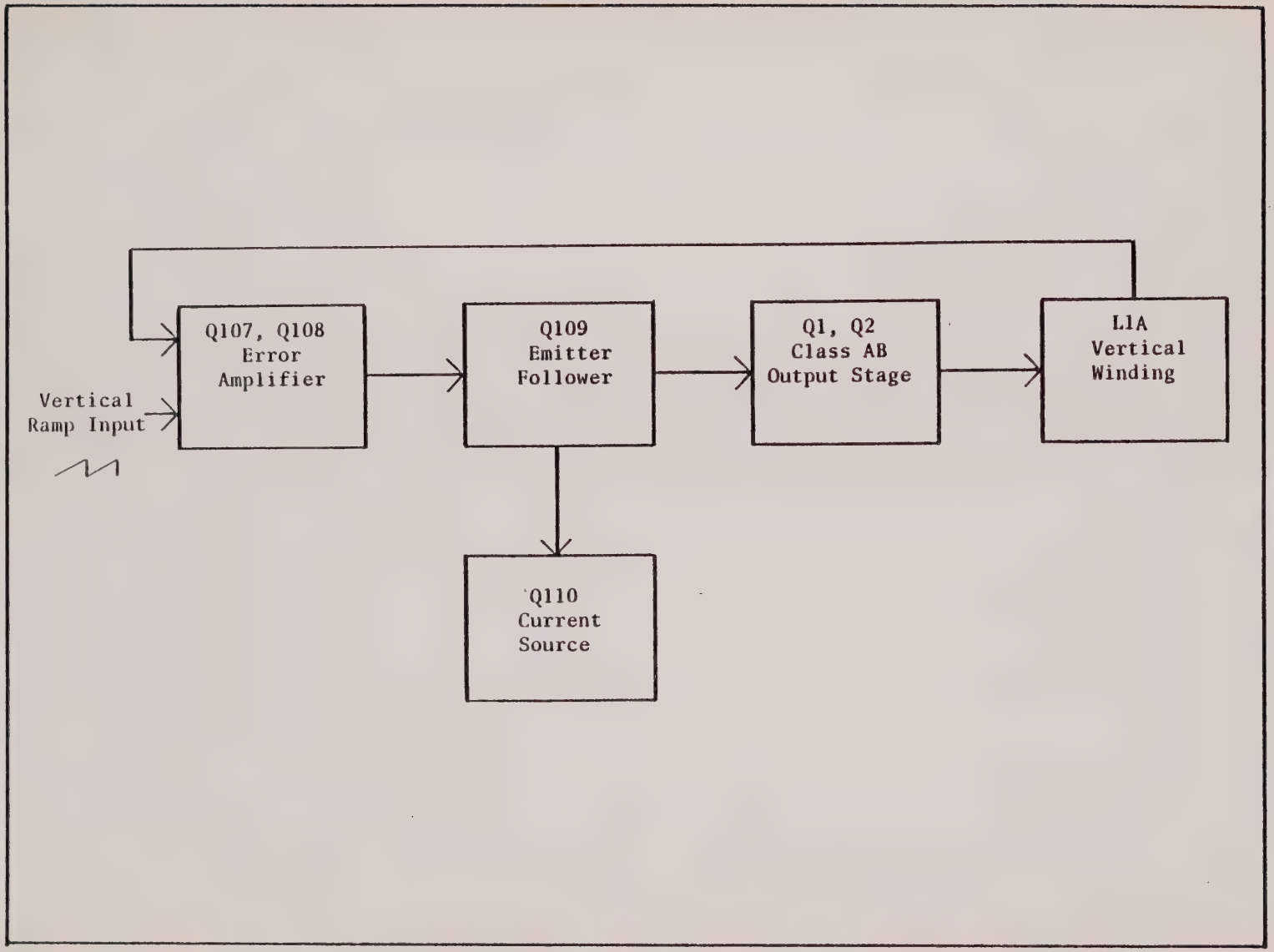

Figure 4.4 Block Diagram of Vertical Amplifier

output transfer function (voltage at the base of Q108 to the yoke current) is defined by:

$$\frac{I_{out}}{E_{IN}} = \frac{R125}{R127} \times \frac{1}{R135}$$

This insures that the output yoke current becomes an exact replica of the input ramp voltage.

A voltage replica of the yoke current is produced across R135. This voltage is fed back through C113 to the base of Q107. Q107 together with Q108 comprises a high gain error amplifier that amplifies the voltage difference between the two bases. The amplified voltage difference produces the necessary base current for emitter follower Q109. The base current requirement is a function of the current gain (hfe) of Q109, Q1, Q2 and the output yoke current. Q1 and Q2 comprise a class AB emitter follower output stage. Q1 supplies current during the first half of vertical scan (CRT screen top to center) with Q2 supplying current during the last half of scan (CRT screen center to bottom). During vertical retrace, the yoke current is quickly reversed when the peak yoke current is transferred from Q2 to Q1. The retrace time is governed by the flyback voltage which is defined by the natural clamping action of the amplifier at +52V (TP112). Q110 is a current source of sufficient magnitude to handle the peak base current requirement of Q2. The class A bias to eliminate crossover distortion is provided by CR103 and R130. R121, R122, R123, R124 and R133 are DC biasing resistors to insure the amplifier operates within the linear region.

Optional skip scan electronics Q104, U101, C105, C108 and VR102 provides the ability to step the vertical amplifier. Q104 operates as a normally off switch. With the application of a positive pulse at J101-5, Q104 turns on and the collector voltage jumps to 22V as defined by zener VR102. The collector voltage and the 7.5K, 100K resistors in U101 combine to charge C109 and C110 for the duration of the input pulse (as defined in section 1.2.5). The resultant voltage step across C109 and C110 (TP104) is processed by the vertical amplifier to produce a corresponding jump in yoke current. For CRT deflection jumps of <0.16", the settling time of the vertical amplifier is <50µs. Capacitor C108 couples the ramp waveform back to Q104 to provide linearity correction to the skip scan waveform.

4.3 HORIZONTAL ELECTRONICS

4.3.1 Horizontal Deflection

Integrated circuits U102 and U103 are used as one shot delays to perform 2 functions: 1) U102 and one half U103 provide an adjustable one horizontal line sync delay which permits the video to be centered horizontally within the raster and 2) the other half of U103 generates the proper duty cycle for the horizontal output transistor.

The standard main PWA is wired for a positive sync signal applied at J101-6. The input circuit can be modified to accept a negative sync signal at J101-6 by removing the positive sync jumper wire between the collector of Q112 and C126 and inserting a jumper wire connecting R145 to C126.

The positive sync pulse is inverted by Q112 and applied to pin U102-2 to produce a positive going pulse at pin U102-3. The time out of this positive pulse is equal to 1.1(R151 C130). After the pulse times out, the negative going edge applied to pin U103-6 produces another positive pulse at pin U103-5. In this case, the pulse duration is variable according to 1.1(R153+R154)C133. This completes the one line sync delay. The negative going edge of this pulse is coupled to pin U103-8 by C134 to produce another positive pulse at pin U103-9 with a time duration equal to 1.1(R158 C136). This provides a duty cycle consistant with proper operation of the horizontal output transistor.

The complete timing relationship is shown in Figure 4.5.

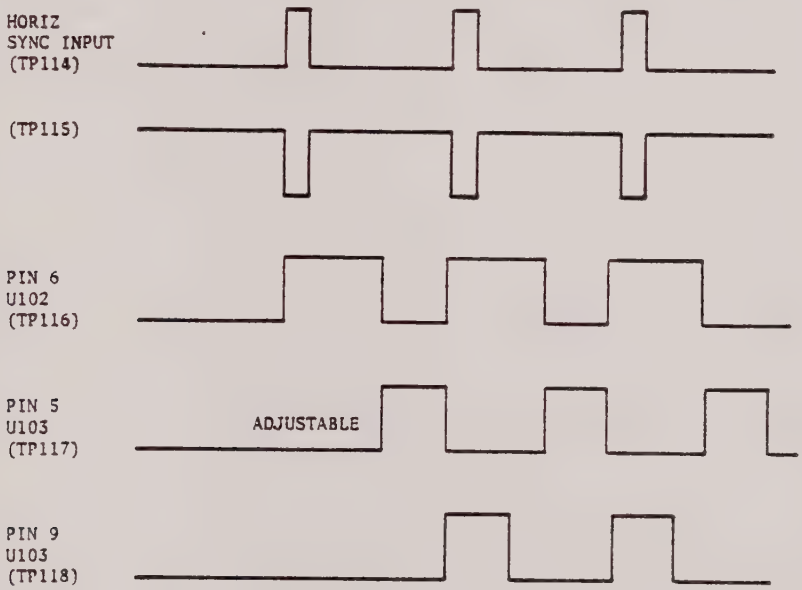

Figure 4.5 Horizontal Timing Diagram of U102 & U103

Horizontal driver Q114 and horizontal output transistor Q3 both operate as switches. The positive pulse at pin U103-9 drives Q114 into saturation. Transformer T101 is phased so that Q3 is turned off during this time. When the primary current of T101 is interrupted by the turn off of Q114, the secondary voltage reverses to turn Q3 on.

The horizontal output stage performs 2 functions: 1) to supply the yoke with the necessary scanning current and 2) develop the CRT anode, G1, G2 and focus voltages. Item 2 will be discussed in section 4.3.2.

Just before horizontal flyback (or when the electron beam moves rapidly from the extreme right side of the CRT screen to the left), maximum yoke current is flowing out of terminal E115 through switch Q3 to ground. Flyback is initiated by the turn off of Q3. With Q3 off, the yoke energy as well as the energy in the flyback primary (T1) is transferred through resonance action to retrace capacitor C142, the yoke distributed capacitance and T1 capacitance. When this

energy transfer is complete, the capacitor voltage (TP120) is maximum (400-600V depending upon line rate), the inductive current is zero and the electron beam has returned to screen center. Now the capacitive energy transfers back to inductive energy to produce a yoke current of the same magnitude but of the opposite direction to that just prior to flyback. This completes beam retrace to the left side of the screen.

The capacitor voltage now swings negative but is clamped near ground by damper diode CR108 which results in the inductive current transferring from the capacitor to CR108. Linear scan now begins as a result of the DC voltage on C143 being impressed across the yoke. C143 is charged to the power supply voltage of +55 VDC and prevents any DC currents from flowing through the yoke.

After the electron beam has moved a distance of about 35% across the screen, Q3 is turned on and the yoke current is transferred from CR108 to Q3. Q3 now carries the yoke current for the remainder of the linear scan time.

As discussed in the vertical section, the desired current waveform for a linear scan on the CRT is an "S" shaped ramp. C143 also provides this "S" shaping by impressing a parabolic voltage across the yoke in addition to a DC voltage.

Additional linearity correction is provided by saturable inductor L104. Without L104, the video would be stretched on the left side of the screen because of the R losses present in the yoke, Q3 etc.

L103 is an adjustable coil placed in series with the horizontal yoke winding to provide width control. The coil inductance controls the voltage magnitude available to the yoke and controls the resultant current magnitude and raster width.

4.3.2 CRT Operating Voltages

The DC operating voltages for the CRT with the exception of the filament voltage are all obtained by rectification and filtering of the horizontal flyback pulse. CR106 and C121 rectify and filter the flyback pulse across Q3 to produce a G2 voltage of 400-600 volts depending upon the horizontal operating frequency. This voltage also feeds the focus grid of the CRT through R141 and focus control R142.

The flyback pulse is transformer coupled by T2, rectified and filtered by CR109 and C119 to produce -90V which is used as the source voltage for G1 to control raster brightness. Q111 aids in eliminating CRT spot burn during power turn off by rapidly discharging the CRT aquadag capacitance.

The CRT anode voltage is developed by T2, rectification diode CR1 and the aquadag filter capacitance. The voltage is typically 17kV for the 15" CRT size and 14kV for the 12" CRT size.

The filament voltage of 6.3V RMS is obtained from a 6 turn winding added to T2.

4.4 X-RAY PROTECTION ELECTRONICS

To comply with the DHEW requirements on X-ray radiation, Q113 and VR103 are

employed to shut down the high voltage in the event the DC supply voltage exceeds 60V DC. If by misadjustment or failure in the regulator electronics, the input voltage should exceed about 60V DC, zener VR108 will start to conduct and turn Q113 on. With Q113 conducting, the supply voltage for U102 and U103 is reduced to zero; this removes the horizontal drive signal and subsequently the high voltage.

4.5 DYNAMIC FOCUS ELECTRONICS

For optimum electron beam focusing over the complete CRT face, the focus voltage should increase as the deflection angle increases. As such, the focus voltage would be at a minimum in the CRT center and at a maximum in the corners. The optional dynamic focus electronics approximates this requirement by varying the focus voltage as a function of horizontal position from tube center.

The horizontal waveform across Q3 is processed by the C403, L401, C402 tank network to produce the parabolic waveform (See Figure 5.1). L401 provides for amplitude adjustment over the range of 200V to 400V p-p. C401 couples the waveform to the focus electrode.

4.6 LOW VOLTAGE REGULATED SUPPLY

The AC line voltage is applied to transformer T1 (Refer to Figure 4.6). The secondary voltage developed is rectified and filtered by CR302 and C1 to produce a DC voltage for the regulator electronics of 76V DC. The 76V DC input is dropped to +55V DC through the series pass transistor Q4. DC regulation of +55 volts is maintained by tapping down the voltage through the divider network of R311, R312 and R313. The resultant 6.3V DC at the wiper arm of R312 is applied to the base of Q302. Also a DC reference voltage from VR301 is applied to the emitter of Q302. This transistor then develops a DC error current that flows through R310 to the base of emitter follower Q305. Current source Q301 supplies current to the base of Q305 and collector of Q302. This bias current from Q301 will tend to shift the base of Q305 in a positive direction where as the current from Q302 will tend to shift the base in the negative direction. This results in an error current from the collector of Q302 that controls emitter follower Q305 and also the series pass transistor Q4. This enables the DC output voltage to be maintained at +55V DC, independent of the input voltage and output load current.

Foldback current limiting of the +55V DC supply is provided by means of transistor Q303 and resistors R306, R307, R308 bias network. When the load current exceeds about 2 amps, the voltage drop across R309 is of sufficient magnitude to turn on Q303. As Q303 turns on, the base current supplied to Q305 decreases to produce a corresponding decrease in output voltage. In the event of a direct short on the +55V DC bus, the short circuit current will be approximately 100ma. Removing the external short circuit will allow the regulator to resume normal operation.

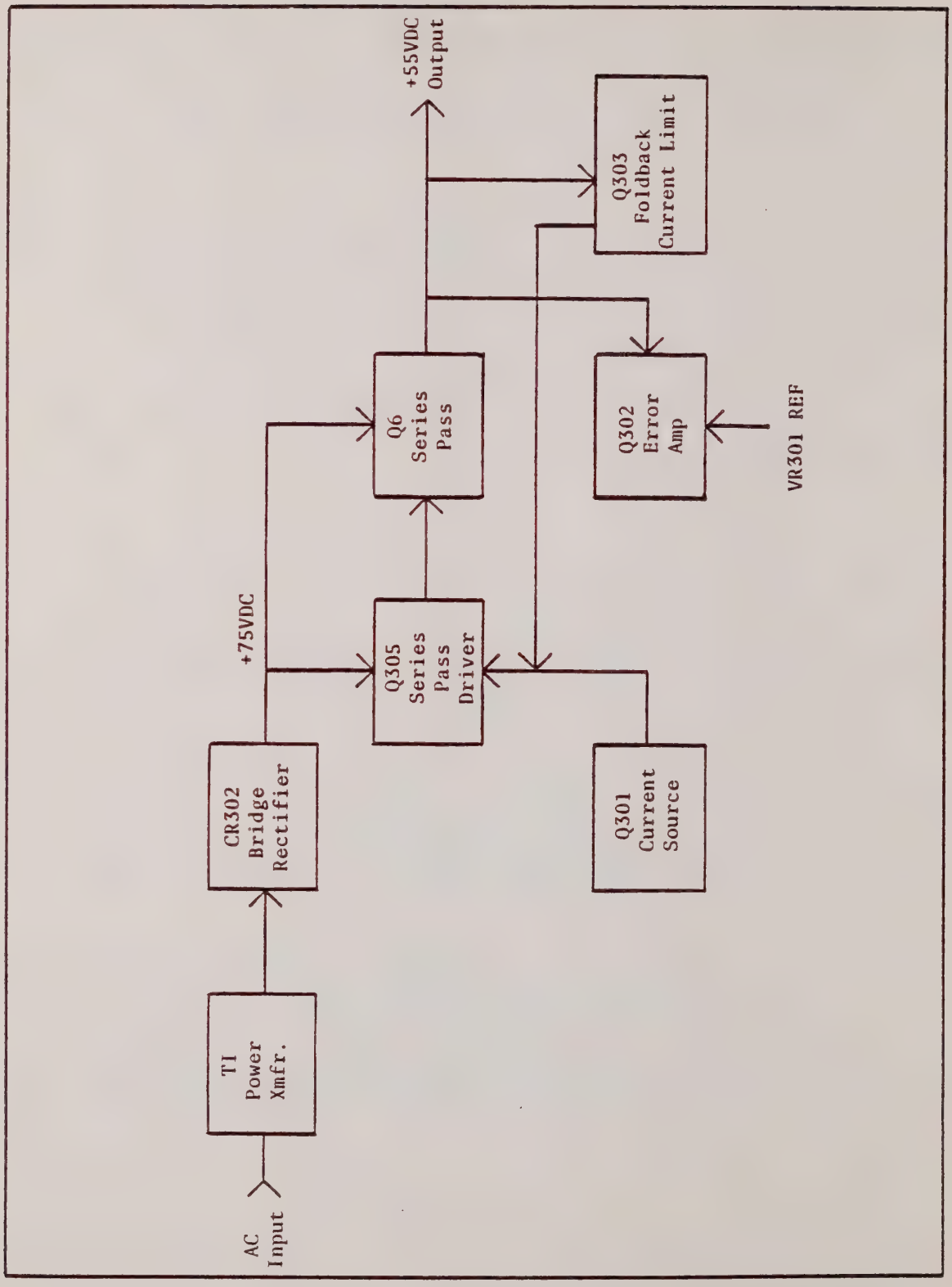

Figure 4.6 Power Supply Block Diagram

Section 5

ADJUSTMENT AND MAINTENANCE

5.1 GENERAL

This section describes the adjustment procedures to be used for set up of the various circuits during routine maintenance or after component replacement.

5.2 INITIAL TURN-ON

Connect the signal input connector to J101 of the main PWA and connect the power input connector to J1 of the power transformer T1. Turn on the Display Monitor and the test equipment; allow 15 minutes for warm-up.

All the horizontal and vertical circuits adjustments can be made using an "E" or "#" character. Adjust the raster brightness to just beyond visual extinction with the brightness control.

5.3 POWER SUPPLY ADJUSTMENT

Connect a DC volt meter to the anode of CR104, located near J102-3 on the main PWA. Adjust the B+ adjust control on the LV regulator PWA for a meter reading of +55V±0.5V.

5.4 VERTICAL ELECTRONICS

5.4.1 Vertical Sync Adjust

The Vertical Sync Adjust control is located on the main PWA. Adjust this control clockwise (as viewed from the rear of the Display Monitor) until the picture just rolls down. Now back off the control (CCW) until the picture snaps back into sync.

5.4.2 Vertical Linearity and Height Adjust

Both of these controls are located on the main PWA. The vertical linearity control R118 is adjusted for the best vertical linearity. The vertical height control R116 is adjusted for the proper vertical height.

5.4.3 Skip Scan Adjust

This adjustment procedure will apply only to the Display Monitor that has the skip scan option.

Apply the skip scan signal and adjust control U101 until the proper skip height is obtained. In general, the proper skip height is obtained by removing the skip scan signal and establishing a given video height as described in Section 5.4.2. The skip scan signal is then applied and the height is increased to the final height requirement with control U101. As the increase from initial height

to final height becomes larger there will be interaction between the skip scan control and the vertical sync and linearity controls such that R113 and R118 may have to be readjusted.

5.5 HORIZONTAL ELECTRONICS

5.5.1 Width Adjustment

Adjust the Width Control L103 for the desired picture width.

5.5.2 Horizontal Centering Adjustment

Adjust the Horizontal Centering control R153 to center the video horizontally within the raster.

5.6 RASTER CENTERING

The centering magnets located at the back of the yoke are used to center the raster on the CRT. The magnets should never be used to center the video horizontally as this may cause display focus problems as well as the possibility of neck shadow. The rings may have to be used to center the video vertically since the vertical position of the video within the raster is strictly dependent on customer timing and vertical flyback time. Picture tilt is corrected by rotating the yoke.

5.7 FOCUS

Adjust focus control R142 for the best overall focus on the CRT.

5.8 DYNAMIC FOCUS

Place oscilloscope probe between TP112 and ground. The waveform should look like Figure 5.1.

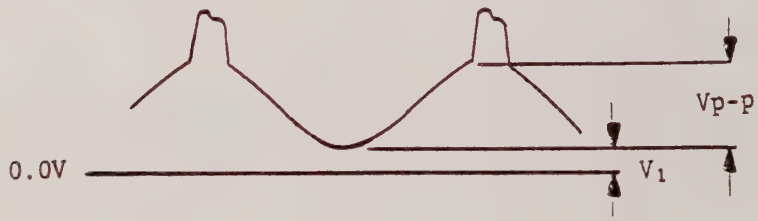

Figure 5.1 Dynamic Focus Waveform

The voltage level at the bottom portion of the waveform (V_1) is controlled with the static Focus control R142 while the peak-to-peak amplitude (Vp-p) is controlled with L401 on the dynamic focus PWA.

V_1 corresponds to CRT center focus and is adjusted for 25V ±75V to give best center focus while the peak-to-peak amplitude is adjusted for 300V ±100V. This

will give the best focus compromise at the edges of the display pattern. The adjustments do interact in that increasing the Vp-p will lower the V_1 voltage and vice versa.

5.9 BRIGHTNESS AND CONTRAST

The brightness and contrast controls are adjusted per Section 3 of the manual.

5.10 TROUBLESHOOTING GUIDE

Symptoms/Possible Solutions

1. Screen is dark - Check to see if the +55V is present. A convenient point of measurement is at CR104 on the main PWA. If there is no +55V, disconnect J104 which isolates the horizontal transistor. If the +55V is still not present, disconnect J105 which isolates the remainder of the horizontal output stage. If the +55V now returns to normal, the problem is most likely the damper diode CR108.

   If the +55V is still not present after disconnecting J104 and J105, the problem is either with the +55V power supply or the vertical amplifier. This can be determined by disconnecting J102 and measuring the +55V at the power supply itself. Actual isolation of a fault to a specific transistor stage is best accomplished by the use of an oscilloscope and reference to the typical waveforms in Figure 6.7 in Section 6.

2. Loss of Video - Check Q101, Q102 and VR101.

3. Loss of Brightness Control - Check CR109 and CR106.

Section 6

SERVICE DATA

6.1 GENERAL

This section contains the replaceable electrical parts list, schematic, PWA component layout and waveforms for servicing of the TTL 120/150 Data Monitor.

If a part you have ordered has been replaced with a new part or an improved part, our customer service representative will contact you concerning any change in the part.

Change information concerning the TTL 120/150 units is located at the rear of the manual in the supplement section.

6.2 ORDERING PARTS

Most parts contained in the monitor are available commercially from electronic parts outlets. When it is necessary to order spare or replacement parts from Ball Electronic Display Division (Ball E.D.D.), include the part description, part number, model and serial number data of the Data Monitor as listed on the serial number plate and, if applicable, the schematic reference number listed in the parts list. Orders for these parts should be sent to:

Ball Electronic Display Division
P.O. Box 43376
St. Paul, Minnesota 55164

For rapid service: Telephone area (612) 786-8900

or

TWX area (910) 563-3552

6.3 RETURNING PARTS

When the monitor requires service or repair in accordance with the enclosed warranty, return the unit or part to:

Ball Electronic Display Division
4501 Ball Road N.E.
Circle Pines, Minnesota 55014

ATTN: Customer Service

Telephone area (612) 786-8900
TWX area (910) 563-3552

Unnecessary delays may be avoided when parts are returned to Ball Electronic Display Division using the following procedures:

(1) Package the unit or part in accordance with the method of shipment. Enclose a list of the material being returned and the reason for returning it.

(2) Send the unit or part, transportation prepaid, to the address stipulated for returning parts.

All equipment and parts described in the warranty will be replaced, provided our examination discloses that the defects are within the limits of the warranty. If damages or defects are not within the limits of the warranty, the customer will be notified of the extent of repairs required and the cost. The unit will be repaired and returned upon agreement.

6.4 WAVEFORMS

The waveforms on the component layout were taken with 1.5V peak-to-peak character signal (Refer to Section 5.2) applied to the Data Monitor. These waveforms can be used as a check point to localize problems to a specific circuit area. The waveform photographs indicate the actual peak amplitude for each test point.

6.5 BOARD ASSEMBLY

The board assembly part number has a 6-002-XXXX prefix. The last four digits of the part number is found under the "use on 6-002" column in the parts list. The last four digits of the board assembly part number is stamped on the component side of the board.

6.6 COMPONENT REPLACEMENT PARTS AFFECTING PRODUCT SAFETY

Product safety must be considered when any components is replaced in this monitor. The critical components that affect X-radiation are denoted in the shaded areas on the schematics. Components in the shaded area are to be replaced only with Ball Electronic Display Division approved components.

The use of substitute components which do not have the same characteristics as the original components may create excessive X-radiation.

6.7 CHASSIS MOUNTED COMPONENT PARTS LIST

REF SYM	DESCRIPTION	PART NUMBER
C1	Cap, 1500-100, ER	1-012-2186
CR1	Diode, HV, D0463	1-021-0463
J1	Connector Shell, 9 Pin Female	1-034-0313
L1	Deflection Coil - Refer to part number on yoke; i.e. 1-023-XXXX	

Transistor

Q1		2N4923	78-85-4923
Q2		2N4920	1-015-1169
Q3		B0402 (15,750)	78-85-0402
	or	B1213 (18,240)	1-015-1213
Q4		DTS410	78-85-0410

Transformer

T1	Power
T2	High Voltage Stamp on Coil Form; i.e. 6-003-XXXX - Refer to last four digits of part number.

NOTES:
1. REFERENCE SCHEMATIC 1-024-0592
2. ALL PWA COMPONENTS PRECEDED WITH AN ASTERISK ARE NOT PART OF THE BASIC BOARD 6-200-0002.
3. PWA 6-002-0673 IS 15750 W/BRT
0674 IS 18240 W/BRT
0764 IS 15750 W/O BRT
0766 IS 18240 W/O BRT

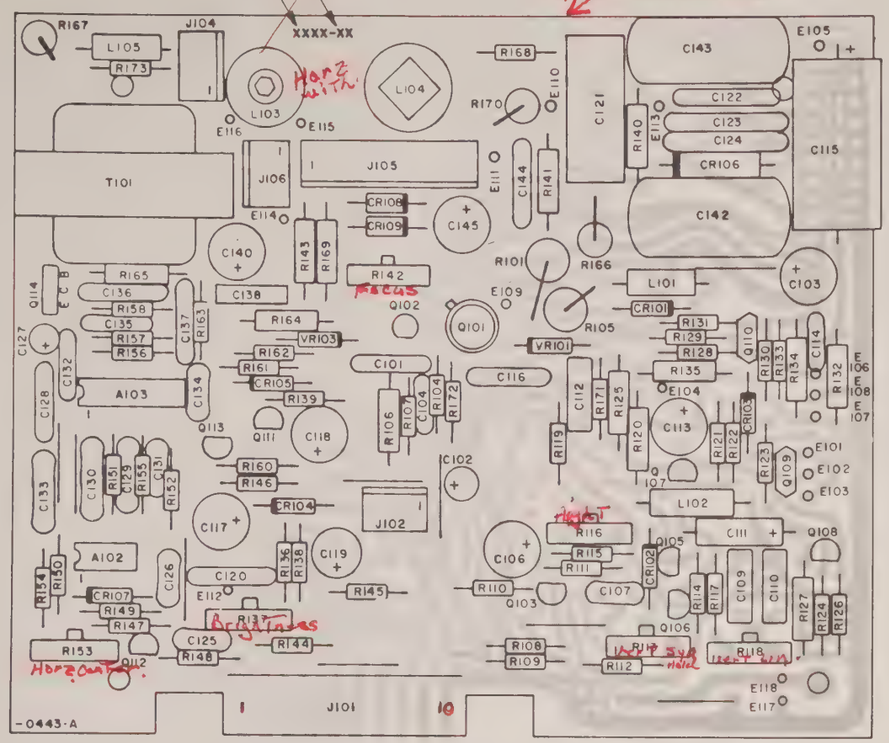

REF SYM	DESCRIPTION	PART NUMBER	0673	0674	0764	0766
*U101	NOT USED					
U102	IC MC1455P	1-025-0118	X	X	X	X
U103	IC 556	1-025-0119	X	X	X	X
	CAP, FIXED uF UNLESS NOTED					
C101	.01-500-20, CD	1-012-0740	X	X	X	X
C102	10-25, ER	1-012-2211	X	X	X	X
C103	33-80, ER	1-012-2259	X	X	X	X
C104	390pF-500-5, DM	10-56-5391	X	X	X	X
*C105	NOT USED					
C106	47-25, ER	1-012-2165	X	X	X	X
C107	.01-100-10, CD	10-12-7109	X	X	X	X
*C108	NOT USED					
C109	.22-200-10, MY	1-012-0930	X	X	X	X
C110	.22-200-10, MY	1-012-0930	X	X	X	X
*C111	4.7-35-10, T	1-012-2301	X	X	X	X
C112	.0068-200-10, MY	10-47-7682	X	X	X	X
C113	10-100, ER	1-012-2260	X	X	X	X
C114	51pF-500-5, DM	10-56-5510	X	X	X	X
C115	220-63, EA	1-012-2261	X	X	X	X
C116	.1-100-20, CD	10-12-7104	X	X	X	X
C117	33-80, ER	1-012-2259	X	X	X	X
C118	33-80, ER	1-012-2259	X	X	X	X
C119	1-160, ER	1-012-2251	X	X	X	X
C120	.01-1000, CD	1-012-0112	X	X	X	X
C121	.22-630-10, MY	1-012-2287	X	X	X	X
C122	.02-1000-20, CD	1-012-2217	X	X	X	X
C123	.1-500-20, CD	10-16-7104	X	X	X	X
C124	.1-500-20, CD	10-16-7104	X	X	X	X
C125	110pF-500-5, DM	10-56-5111	X	X	X	X
C126	51pF-500-5, DM	10-56-5510	X	X	X	X
C127	1-50, ER	1-012-2189	X	X	X	X
C128	.1-100-10	1-012-2236	X	X	X	X
C129	.01-500-20, CD	1-012-0740	X	X	X	X
C130	.001-500-5, DM	10-57-5102	X	X	X	X
C131	110pF-500-5, DM	10-56-5111	X	X	X	X
C132	.01-500-20, CD	1-012-0740	X	X	X	X
C133	.001-500-5, DM	10-56-5102	X	X	X	X
C134	110pF-500-5, DM	10-56-5111	X	X	X	X
C135	.01-500-20, CD	1-012-0740	X	X	X	X
C136	.001-500-5, DM	10-56-5102	X	X	X	X
C137	.1-100-10, MY	1-012-2236	X	X	X	X
C138	.1-100-20, CD	10-12-7104	X	X	X	X
*C139	NOT USED					
C140	33-80, ER	1-012-2259	X	X	X	X
C141	NOT USED					
*C142	.006-1600-10, MY	1-012-2268	X		X	
OR	.01-1500-10, MY	1-012-2248		X		X
*C143	1.2-200-10, PC	1-012-2233		X		X
OR	1-100-10, PC	1-012-2220	X		X	
C144	.1-100-20, CD	10-12-7104	X	X	X	X
C145	33-80, ER	1-012-2259	X	X	X	X

REF SYM	DESCRIPTION	PART NUMBER	0673	0674	0764	0766
	DIODE					
CR101	D0160	1-021-0160	X	X	X	X
CR102	D0410	1-021-0410	X	X	X	X
CR103	D0410	1-021-0410	X	X	X	X
CR104	D0403	1-021-0403	X	X	X	X
CR105	D0410	1-021-0410	X	X	X	X
CR106	D0447	1-021-0447	X	X	X	X
CR107	D0410	1-021-0410	X	X	X	X
CR108	D0436	1-021-0436	X	X	X	X
CR109	D0403	1-021-0403	X	X	X	X
	CONNECTOR					
J102	CONN, 3 PIN	1-039-0148	X	X	X	X
*J103	NOT USED					
J104	CONN, 3 PIN	1-039-0148	X	X	X	X
J105	CONN, 8 PIN	1-039-0149	X	X	X	X
J106	CONN, 3 PIN	1-039-0148	X	X	X	X
	COIL					
L101	4.7uH	15-13-1479	X	X	X	X
L102	560uH	1-016-0302	X	X	X	X
*L103	WIDTH	1-016-0304	X		X	
OR	WIDTH	1-016-0317		X		X
*L104	LINEARITY	1-016-0331	X		X	
OR	LINEARITY	1-016-0330		X		X
L105	8.2uH	15-13-1829	X	X	X	X
	TRANSISTORS					
Q101	2N3053A	1-015-1205	X	X	X	X
Q102	2N3904	1-015-1144	X	X	X	X
Q103	2N3904	1-015-1144	X	X	X	X
*Q104	NOT USED					
Q105	2N6027	1-015-1157	X	X	X	X
Q106	MPS-A65	1-015-1186	X	X	X	X
Q107	MPS-A56	1-015-1171	X	X	X	X
Q108	MPS-A06	1-015-1165	X	X	X	X
Q109	MPS-U06	1-015-1164	X	X	X	X
Q110	MPS-U06	1-015-1164	X	X	X	X
Q111	MPS-A93	1-015-1202	X	X	X	X
Q112	2N3904	1-015-1144	X	X	X	X
Q113	2N5060	1-015-1168	X	X	X	X
Q114	MJE-340	78-86-0340	X	X	X	X
	RES, FIXED CARBON 1/4W±5%					
R101	1.5K-2-10	1-011-1500	X	X	X	X
*R102	NOT USED					
*R103	NOT USED					
*R104	75	70-16-0750	X	X	X	X
R105	820-2-5	1-011-2422	X	X	X	X
R106	22-1/2-5	1-011-2230	X	X	X	X
R107	10	70-16-0100	X	X	X	X
R108	10K	70-16-0103	X	X	X	X
R109	470	70-16-0471	X	X	X	X
R110	10K	70-16-0103	X	X	X	X
R111	220	70-16-0221	X	X	X	X
R112	1.8K	70-16-0182	X	X	X	X
R113	VAR 2.5K-20	1-011-5636	X	X	X	X
R114	100K	70-16-0104	X	X	X	X
R115	220K	70-16-0224	X	X	X	X
R116	VAR 25K-20	1-011-5325	X	X	X	X
R117	20K	70-16-0203	X	X	X	X
R118	VAR 25K-20	1-011-5325	X	X	X	X
R119	12K	70-16-0123	X	X	X	X
R120	8.2K-1/2-5	1-011-2292	X	X	X	X
R121	10K	70-16-0103	X	X	X	X
*R122	62K	70-16-0623	X	X	X	X
R123	47K	70-16-0473	X	X	X	X
*R124	10K	70-16-0103	X	X	X	X
R125	1.2K-1/2-5	1-011-2272	X	X	X	X
R126	1M	70-16-0105	X	X	X	X
*R127	1.8K-1/2-5	1-011-2276	X	X	X	X
R128	16K	70-16-0163	X	X	X	X
R129	2K	70-16-0202	X	X	X	X
R130	15	70-16-0150	X	X	X	X
R131	510	70-16-0511	X	X	X	X
R132	3-1/2-5	1-011-2478	X	X	X	X
R133	10K	70-16-0103	X	X	X	X
R134	3-1/2-5	1-011-2478	X	X	X	X
R135	5.1-1/2-5	70-17-0519	X	X	X	X
R136	36K	70-16-0363	X	X	X	X
*R137	VAR; 100K-20	1-011-5435	X	X		
R138	20K	70-16-0203	X	X	X	X
R139	4.7K	70-16-0472	X	X	X	X
R140	3.3M-1/2-5	1-011-2354	X	X	X	X
R141	470K-1/2-5	1-011-2334	X	X	X	X
R142	VAR 2.5M-20	1-011-5566	X	X	X	X
R143	3.3M-1/2-5	1-011-2354	X	X	X	X
R144	6.8K	70-16-0682	X	X	X	X
R145	1K	70-16-0102	X	X	X	X
R146	47	70-16-0470	X	X	X	X
R147	4.7K	70-16-0472	X	X	X	X
R148	10K	70-16-0103	X	X	X	X
R149	24K	70-16-0243	X	X	X	X
R150	30K	70-16-0303	X	X	X	X
*R151	36K	70-16-0363	X		X	
OP	33K	70-16-0333		X		X
R152	27K	70-16-0273	X	X	X	X
*R153	VAR 20K-20	70-89-0203	X	X	X	X
R154	6.8K	70-16-0682	X	X	X	X
R155	1K	70-16-0102	X	X	X	X
R156	27K	70-16-0273	X	X	X	X
R157	91K	70-16-0913	X	X	X	X
*R158	24K	70-16-0243	X		X	
OR	20K	70-16-0203		X		X
*R159	NOT USED					
R160	560K	70-16-0564	X	X	X	X
R161	8.2K	70-16-0822	X	X	X	X
R162	10K	70-16-0103	X	X	X	X
R163	200	70-16-0201	X	X	X	X
R164	47-1/2-5	1-011-2238	X	X	X	X
R165	6.8K-1-5	1-011-2536	X	X	X	X
R166	1.2-2-10	1-011-1395	X	X	X	X
R167	1.2-2-10	1-011-1395	X	X	X	X
R168	1K	70-16-0102	X	X	X	X
R169	330-1/2-5	1-011-2258	X	X	X	X
*R170	3.3-2-10, WW	1-011-1571		X		X
OR	1.2-2-10, WW	1-011-1395	X		X	
R171	100	70-16-0101	X	X	X	X
R172	1K	70-16-0102	X	X	X	X
R173	100	70-16-0101	Y	X	X	X
*R174	NOT USED					
	TRANSFORMER					
T101	HORIZ DRIVER	1-017-5330	X	X	X	X
	ZENER					
VR101	Z0753	78-15-0753	X	X	X	X
*VR102	NOT USED					
VR103	Z0461	1-021-0461	X	X	X	X
	MISCELLANEOUS					
*SOCKET, CRT		1-022-0442	X	X	X	X
PWB		1-029-0443	X	X	X	X
ASSY CONN Q1 & Q2		1-041-0105	X	X	X	X
WIRE/CONT BRN		1-043-1210	X	X	X	X
WIRE/CONT RED		1-043-2210	X	X	X	X
WIRE/CONT YEL		1-043-4210	X	X	X	X
WIRE/CONT BLU		1-043-6210	X	X	X	X
CABLE TIE (2)		2-048-0110	X	X	X	X
JUMPER WIRE (8) 1/4W LG			X	X	X	X
JUMPER WIRE (1) 41.3MM LG			X	X	X	X

REVISIONS			
A	ENGRG RELEASE		
B			
C	ECO 5319, 5510, 5219 Deleted 4 jumper wires and basic PWA parts list. C137 was 68 Pfd and C137 was .01 500V		
D	ECO 5370, 5371, 5219		

TOLERANCES UNLESS OTHERWISE SPECIFIED
DECIMALS: .XX ±.030, .XXX ±.020, .XXXX ±.010
FRACTIONS: 0 TO 6 ±1/32; 6 TO 24 ±1/16; ABOVE 24 ±1/8
DIMENSIONS ARE IN INCHES
THREADS CLASS 2B FIT AFTER PLATING
ANGULAR TOL ±0° 30'
DO NOT SCALE DRAWING

	SIGNATURE	DATE
DRAFTSMAN		8-31-77
CHECKER		9-12-77
DESIGNER		
ENGINEER		

TITLE: PWA, TTL-120
SIZE: D | DRAWING NO: 5-017-5019 | REV: D
USED ON
SCALE: 2 - 1 | SHEET 1 OF 1

FIGURE 6.2 TTL 120 MAIN PWA COMPONENT LAYOUT AND PARTS LIST

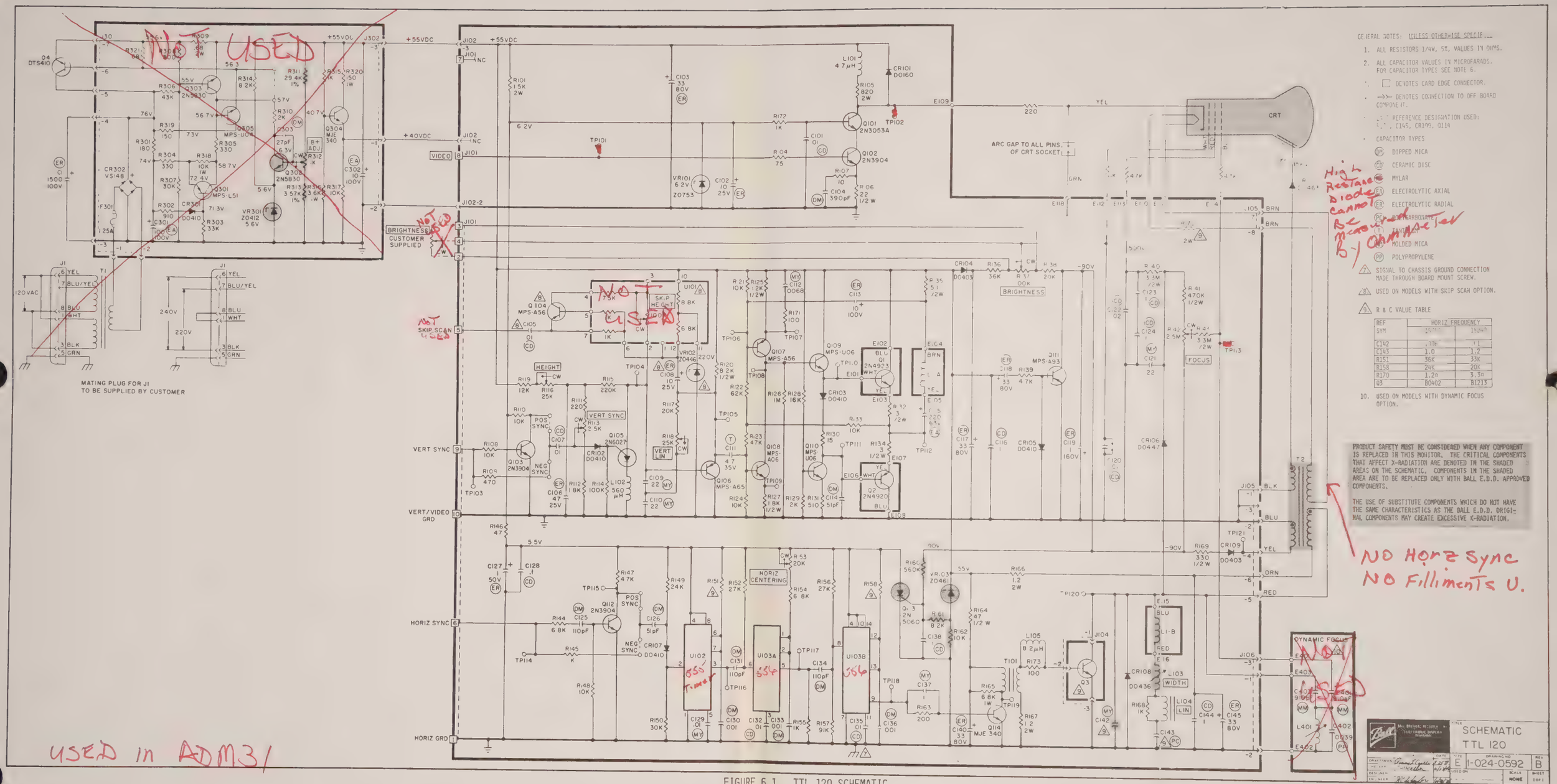

GENERAL NOTES: UNLESS OTHERWISE SPECIFIED

1. ALL RESISTORS 1/4W, 5%, VALUES IN OHMS.
2. ALL CAPACITOR VALUES IN MICROFARADS. FOR CAPACITOR TYPES SEE NOTE 6.
3. ☐ DENOTES CARD EDGE CONNECTOR.
4. —>— DENOTES CONNECTION TO OFF BOARD COMPONENT.
5. REFERENCE DESIGNATION USED: C145, CR109, Q114
6. CAPACITOR TYPES
   - (DM) DIPPED MICA
   - (CD) CERAMIC DISC
   - (MY) MYLAR
   - (EA) ELECTROLYTIC AXIAL
   - (ER) ELECTROLYTIC RADIAL
   - (PC) ~~CARBONATE~~ TANTALUM
   - (MM) MOLDED MICA
   - (PP) POLYPROPYLENE
7. SIGNAL TO CHASSIS GROUND CONNECTION MADE THROUGH BOARD MOUNT SCREW.
8. USED ON MODELS WITH SKIP SCAN OPTION.
9. R & C VALUE TABLE

REF SYM	HORIZ FREQUENCY 15,750	HORIZ FREQUENCY 15,240
C142	.33K	.11
C143	1.0	1.2
R151	36K	33K
R158	24K	20K
R170	1.2Ω	3.3Ω
Q3	B0402	B1213

10. USED ON MODELS WITH DYNAMIC FOCUS OPTION.

PRODUCT SAFETY MUST BE CONSIDERED WHEN ANY COMPONENT IS REPLACED IN THIS MONITOR. THE CRITICAL COMPONENTS THAT AFFECT X-RADIATION ARE DENOTED IN THE SHADED AREAS ON THE SCHEMATIC. COMPONENTS IN THE SHADED AREA ARE TO BE REPLACED ONLY WITH BALL E.D.D. APPROVED COMPONENTS.

THE USE OF SUBSTITUTE COMPONENTS WHICH DO NOT HAVE THE SAME CHARACTERISTICS AS THE BALL E.D.D. ORIGINAL COMPONENTS MAY CREATE EXCESSIVE X-RADIATION.

FIGURE 6.1 TTL 120 SCHEMATIC

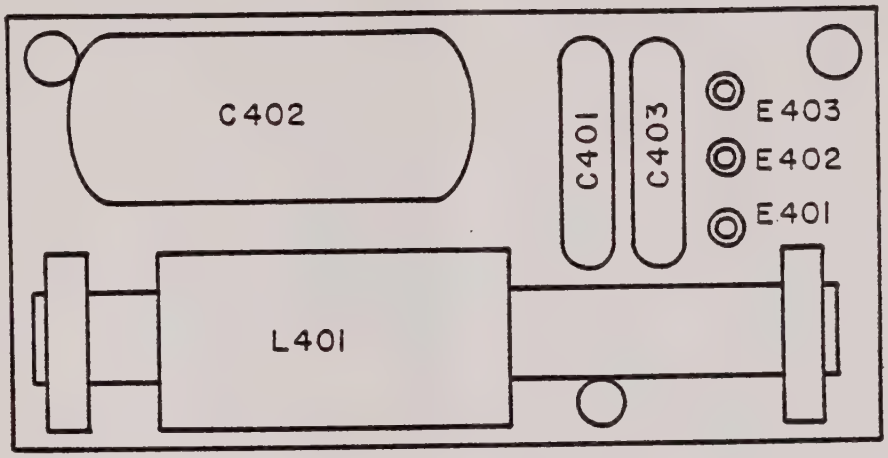

REF SYM	DESCRIPTION	PART NUMBER
	CAP, FIXED uF UNLESS NOTED	
C401	910-1000-5, MM	1-012-0523
C402	3900-1600-10, PP	1-012-2262
C403	910-1000-5, MM	1-012-0523
	COIL	
L401	FOCUS	1-016-0249
	MISCELLANEOUS	
	PWB	1-029-0446
	CONN, SHELL, 3 PIN	1-034-0356
E401	WIRE/CONT ORN	1-043-3271
E402	WIRE/CONT BLK	1-043-0270
E403	WIRE/CONT RED	1-043-2271

Figure 6.7 Component Layout for Dynamic Focus PWA

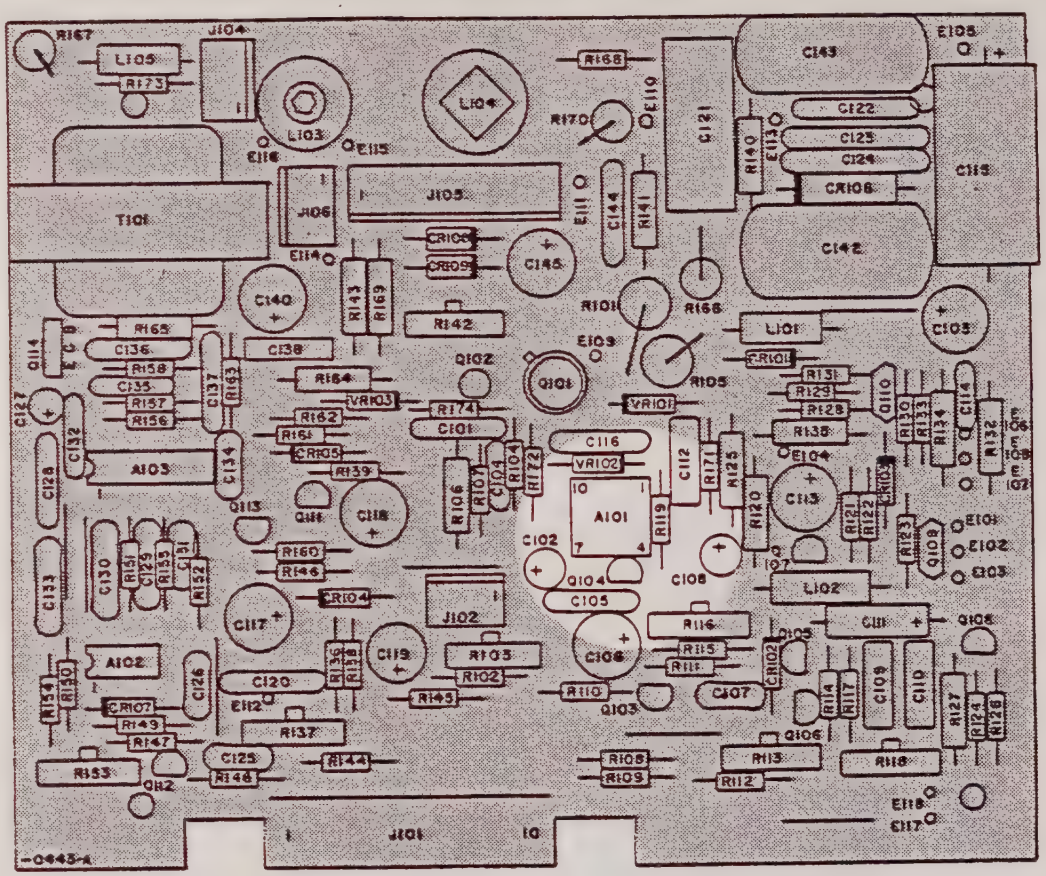

PART NUMBERS FOR PWA'S WITH THE SKIP SCAN OPTION ARE:

6-002-0738	TTL 150, 15,750 W/BRT
6-002-0768	TTL 150, 18,240 W/BRT
6-002-0769	TTL 150, 15,750 W/O BRT
6-002-0770	TTL 150, 18,240 W/O BRT
6-002-0771	TTL 120, 15,750 W/BRT
6-002-0772	TTL 120, 18,240 W/BRT
6-002-0773	TTL 120, 15,750 W/O BRT
6-002-0774	TTL 120, 18,240 W/O BRT

THE BALANCE OF THE COMPONENT PARTS AND PART NUMBERS CAN BE FOUND ON THE APPROPRIATE COMPONENT LAYOUTS WITHOUT THE SKIP SCAN OPTION; FOR EXAMPLE, BALANCE OF THE PARTS USED ON 6-002-0738 TTL150, 15,750, W/BRT CAN BE LOCATED ON FIGURE 6.4.

SKIP SCAN COMPONENT PARTS LIST

REF SYM	DESCRIPTION	PART NUMBER
U101	RES TRIM 100K	1-011-8094
C105	CAP .01uF-500-20, CD	1-012-0740
C108	CAP 10uF-25, ER	1-012-2211
Q104	TRANSISTOR MPS-456	1-015-1171
VR102	ZENER, ZD446	1-021-0446

Figure 6.8 Skip Scan Component Layout and Parts List

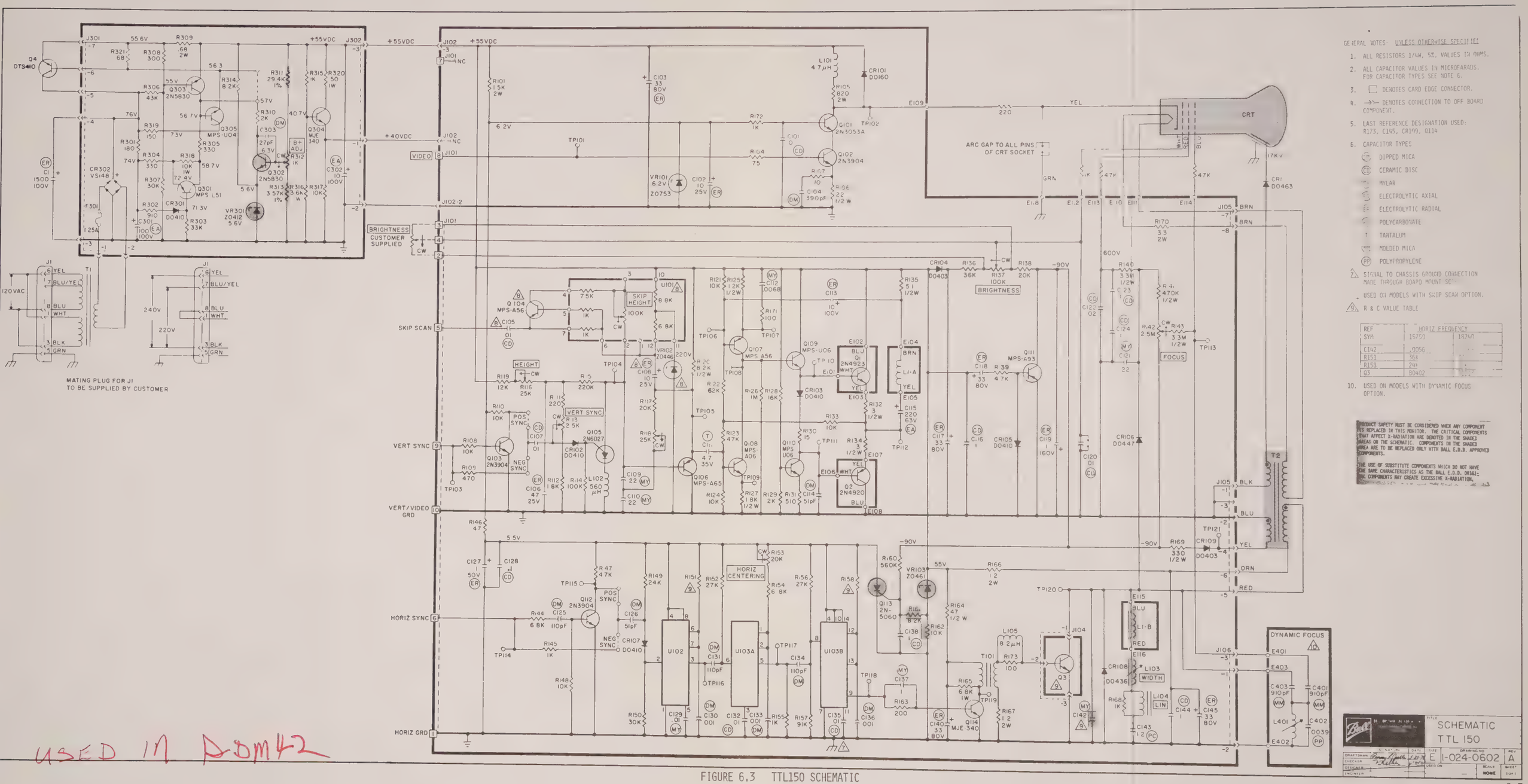

USED IN DOM42

FIGURE 6.3 TTL150 SCHEMATIC

NOTES:
1. REFERENCE SCHEMATIC: 1-024-0602
2. ALL PWA COMPONENTS PRECEDED WITH AN ASTERISK ARE NOT PART OF THE BASIC BOARD 6-200-0002.
3. PWA 6-002-0671 IS 15750 W/BRT
   0672 IS 18240 W/BRT
   0763 IS 15750 W/O BRT
   0765 IS 18240 W/O BRT

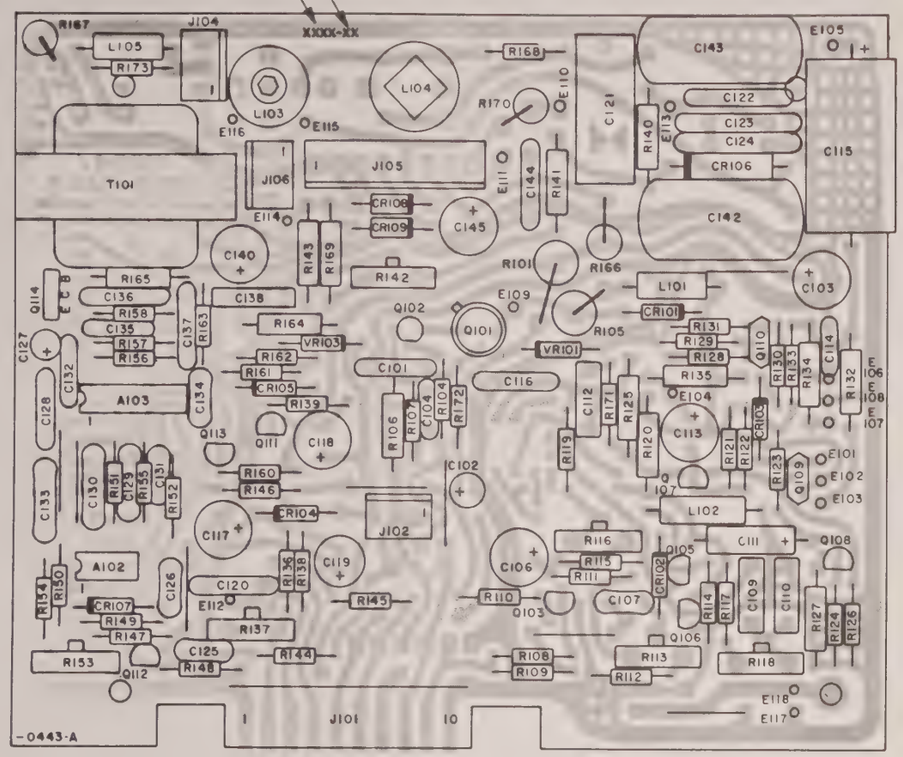

REF SYM	DESCRIPTION	PART NUMBER	USED ON 6-002- 0671	0672	0763	0765
*A101	NOT USED					
A102	IC MC1455P	1-025-0118	X	X	X	X
A103	IC 556	1-025-0119	X	X	X	X
	CAP, FIXED uF UNLESS NOTED					
C101	.01-500-20, CD	1-012-0740	X	X	X	X
C102	10-25, ER	1-012-2211	X	X	X	X
C103	33-80, ER	1-012-2259	X	X	X	X
C104	390pF-500-5, DM	10-56-5391	X	X	X	X
*C105	NOT USED					
C106	47-25, ER	1-012-2165	X	X	X	X
C107	.01-100-10, CD	10-12-7109	X	X	X	X
*C108	NOT USED					
C109	.22-200-10, MY	1-012-0930	X	X	X	X
C110	.22-200-10, MY	1-012-0930	X	X	X	X
*C111	4.7-35-10, T	1-012-2301	X	X	X	X
C112	.0068-200-10, MY	10-47-7682	X	X	X	X
C113	10-100, ER	1-012-2260	X	X	X	X
C114	51pF-500-5, DM	10-57-5510	X	X	X	X
C115	220-63, EA	1-012-2261	X	X	X	X
C116	.1-100-20, CD	10-12-7104	X	X	X	X
C117	33-80, ER	1-012-2259	X	X	X	X
C118	33-80, ER	1-012-2259	X	X	X	X
C119	1-160, ER	1-012-2251	X	X	X	X
C120	.01-1000, CD	1-012-0112	X	X	X	X
C121	.22-630-10, MY	1-012-2287	X	X	X	X
C122	.02-1000-20, CD	1-012-2217	X	X	X	X
C123	.1-500-20, CD	10-16-7104	X	X	X	X
C124	.1-500-20, CD	10-16-7104	X	X	X	X
C125	110pF-500-5, DM	10-57-5111	X	X	X	X
C126	51pF-500-5, DM	10-57-5510	X	X	X	X
C127	1-50, ER	1-012-2189	X	X	X	X
C128	.1-100-10	1-012-2236	X	X	X	X
C129	.01-500-20, CD	1-012-0740	X	X	X	X
C130	.001-500-5, DM	10-57-5102	X	X	X	X
C131	110pF-500-5, DM	10-57-5111	X	X	X	X
C132	.01-500-20, CD	1-012-0740	X	X	X	X
C133	.001-500-5, DM	10-57-5102	X	X	X	X
C134	110pF-500-5, DM	10-57-5111	X	X	X	X
C135	.01-500-20, CD	1-012-0740	X	X	X	X
C136	.001-500-5, DM	10-57-5102	X	X	X	X
C137	.1-100-10, MY	1-012-2236	X	X	X	X
C138	.1-100-20, CD	10-12-7104	X	X	X	X
*C139	NOT USED					
C140	33-80, ER	1-012-2259	X	X	X	X
C141	NOT USED		X	X	X	X
*C142	.0056-2000-10, MY	10-35-7562	X		X	
OR	.0068-1600-10, MY	1-012-2210		X		X
*C143	1.2-200-10, PC	1-012-2233	X	X	X	X
C144	.1-100-20, CD	10-12-7104	X	X	X	X
C145	33-80, ER	1-012-2259	X	X	X	X
	DIODE					
CR101	D0160	1-021-0160	X	X	X	X
CR102	D0410	1-021-0410	X	X	X	X
CR103	D0410	1-021-0410	X	X	X	X
CR104	D0403	1-021-0403	X	X	X	X
CR105	D0410	1-021-0410	X	X	X	X
CR106	D0447	1-021-0447	X	X	X	X
CR107	D0410	1-021-0410	X	X	X	X
CR108	D0436	1-021-0436	X	X	X	X
CR109	D0403	1-021-0403	X	X	X	X
	CONNECTOR					
J102	CONN, 3 PIN	1-039-0148	X	X	X	X
*J103	NOT USED					
J104	CONN, 3 PIN	1-039-0148	X	X	X	X
J105	CONN, 8 PIN	1-039-0149	X	X	X	X
J106	CONN, 3 PIN	1-039-0148	X	X	X	X
	COIL					
L101	4.7uH	15-13-1479	X	X	X	X
L102	560uH	1-016-0302	X	X	X	X
*L103	WIDTH	1-016-0304	X		X	
OR	WIDTH	1-016-0319		X		X
*L104	COIL LINEARITY	1-016-0331	X		X	
OR	COIL LINEARITY	1-016-0330		X		X
L105	8.2uH	15-13-1829	X	X	X	X
	TRANSISTORS					
Q101	2N3053A	1-015-1205	X	X	X	X
Q102	2N3904	1-015-1144	X	X	X	X
Q103	2N3904	1-015-1144	X	X	X	X
*Q104	NOT USED					
Q105	2N6027	1-015-1157	X	X	X	X
Q106	MPS-A65	1-015-1186	X	X	X	X
Q107	MPS-A56	1-015-1171	X	X	X	X
Q108	MPS-A06	1-015-1165	X	X	X	X
Q109	MPS-U06	1-015-1164	X	X	X	X
Q110	MPS-U06	1-015-1164	X	X	X	X
Q111	MPS-A93	1-015-1202	X	X	X	X
Q112	2N3904	1-015-1144	X	X	X	X
Q113	2N5060	1-015-1168	X	X	X	X
Q114	MJE-340	78-86-0340	X	X	X	X
	RES, FIXED CARBON 1/4W±5% UNLESS NOTED					
R101	1.5K-2-10	1-011-1500	X	X	X	X
*R102	NOT USED					
*R103	NOT USED					
*R104	75	70-16-0750	X	X	X	X
R105	820-2-5	1-011-2422	X	X	X	X
R106	22-1/2-5	1-011-2230	X	X	X	X
R107	10	70-16-0100	X	X	X	X
R108	10K	70-16-0103	X	X	X	X
R109	470	70-16-0471	X	X	X	X
R110	10K	70-16-0103	X	X	X	X
R111	220	70-16-0221	X	X	X	X
R112	1.8K	70-16-0182	X	X	X	X
R113	VAR 2.5K-20	1-011-5636	X	X	X	X
R114	100K	70-16-0104	X	X	X	X
R115	220K	70-16-0224	X	X	X	X
R116	VAR 25K-20	1-011-5325	X	X	X	X
R117	20K	70-16-0203	X	X	X	X
R118	VAR 25K-20	1-011-5325	X	X	X	X
R119	12K	70-16-0123	X	X	X	X
R120	8.2K-1/2-5	1-011-2292	X	X	X	X
R121	10K	70-16-0103	X	X	X	X
*R122	62K	70-16-0623	X	X	X	X
R123	47K	70-16-0473	X	X	X	X
*R124	10K	70-16-0103	X	X	X	X
R125	1.2K-1/2-5	1-011-2272	X	X	X	X
R126	1M	70-16-0105	X	X	X	X
*R127	1.8K-1/2-5	1-011-2276	X	X	X	X
R128	16K	70-16-0163	X	X	X	X
R129	2K	70-16-0202	X	X	X	X
R130	15	70-16-0150	X	X	X	X
R131	510	70-16-0511	X	X	X	X
R132	3-1/2-5	1-011-2478	X	X	X	X
R133	10K	70-16-0103	X	X	X	X
R134	3-1/2-5	1-011-2478	X	X	X	X
R135	5.1-1/2-5	70-17-0519	X	X	X	X
R136	36K	70-16- 0363	X	X	X	X
*R137	VAR; 100K-20	1-011-5435	X	X		
R138	20K	70-16- 0203	X	X	X	X
R139	4.7K	70-16-0472	X	X	X	X
R140	3.3M-1/2-5	1-011-2354	X	X	X	X
R141	470K-1/2-5	1-011-2334	X	X	X	X
R142	VAR 2.5M-20	1-011-5566	X	X	X	X
R143	3.3M-1/2-5	1-011-2354	X	X	X	X
R144	6.8K	70-16-0682	X	X	X	X
R145	1K	70-16-0102	X	X	X	X
R146	47	70-16-0470	X	X	X	X
R147	4.7K	70-16-0472	X	X	X	X
R148	10K	70-16-0103	X	X	X	X
R149	24K	70-16-0243	X	X	X	X
R150	30K	70-16-0303	X	X	X	X
*R151	36K	70-16-0363	X		X	
OR	33K	70-16-0333		X		X
R152	27K	70-16-0273	X	X	X	X
*R153	VAR 20K-20	70-89-0203	X	X	X	X
R154	6.8K	70-16-0682	X	X	X	X
R155	1K	70-16-0102	X	X	X	X
R156	27K	70-16-0273	X	X	X	X
R157	91K	70-16-0913	X	X	X	X
*R158	24K	70-16-0243	X		X	
OR	20K	70-16-0203		X		X
*R159	NOT USED					
R160	560K	70-16-0564	X	X	X	X
R161	8.2K	70-16-0822	X	X	X	X
R162	10K	70-16-0103	X	X	X	X
R163	200	70-16-0201	X	X	X	X
R164	47-1/2-5	1-011-2238	X	X	X	X
R165	6.8K-1-5	1-011-2536	X	X	X	X
R166	1.2-2-10	1-011-1395	X	X	X	X
R167	1.2-2-10	1-011-1395	X	X	X	X
R168	1K	70-16-0102	X	X	X	X
R169	330-1/2-5	1-011-2258	X	X	X	X
*R170	3.3-2-10, WW	1-011-1571	X	X	X	X
R171	100	70-16-0101	X	X	X	X
R172	1K	70-16-0102	X	X	X	X
R173	100	70-16-0101	X	X	X	X
*R174	NOT USED					
	TRANSFORMER					
T101	HORIZ DRIVER	1-017-5389	X	X	X	X
	ZENER					
VR101	Z0753	78-15-0753	X	X	X	X
*VR102	NOT USED					
VR103	Z0461	1-021-0461	X	X	X	X
	MISCELLANEOUS					
*SOCKET, CRT		1-022-0422	X	X	X	X
PWB		1-029-0443	X	X	X	X
ASSY CONN Q1 & Q2		1-041-0105	X	X	X	X
WIRE/CONT BRN		1-043-1210	X	X	X	X
WIRE/CONT RED		1-043-2210	X	X	X	X
WIRE/CONT YEL		1-043-4210	X	X	X	X
WIRE/CONT BLU		1-043-6210	X	X	X	X
CABLE TIE (2)		2-048-0110	X	X	X	X
JUMPER WIRE (8) 1/4W LG			X	X	X	X
JUMPER WIRE (1) 41.3MM LG			X	X	X	X

REVISIONS		
A	ENGRG RELEASE	
B		
C	ECO 3211, 3310, 3219	Deleted 4 jumper wires and added PWA parts list. R165 was 3.3Ω, C137 was .05, R107 was 33Ω, C107 was .01,1500
D	ECO 3371	

TOLERANCES UNLESS OTHERWISE SPECIFIED
DECIMALS: XX ±.030; XXX ±.020; XXXX ±.010
FRACTIONS: 0 TO 6 ±1/32; 6 TO 24 ±1/16; ABOVE 24 ±1/8
DIMENSIONS ARE IN INCHES
THREADS CLASS #2 FIT AFTER PLATING
ANGULAR TOL ±0° 30'
DO NOT SCALE DRAWING

	SIGNATURE	DATE
DRAFTSMAN		1/31/77
CHECKER		2-2-77
DESIGNER		4-7-77
ENGINEER		4/11/77

TITLE: PW ASSY, TTL-150 15.75 KC, 18.24 KC
SIZE: D — DRAWING NO: 5-017-5015 — REV: D
USED ON
SCALE: 2 - 1 — SHEET 1 OF 1
REV. D — DRAWING NO. 5-017-5015

FIGURE 6.4 TTL 150 MAIN PWA COMPONENT LAYOUT AND PARTS LIST

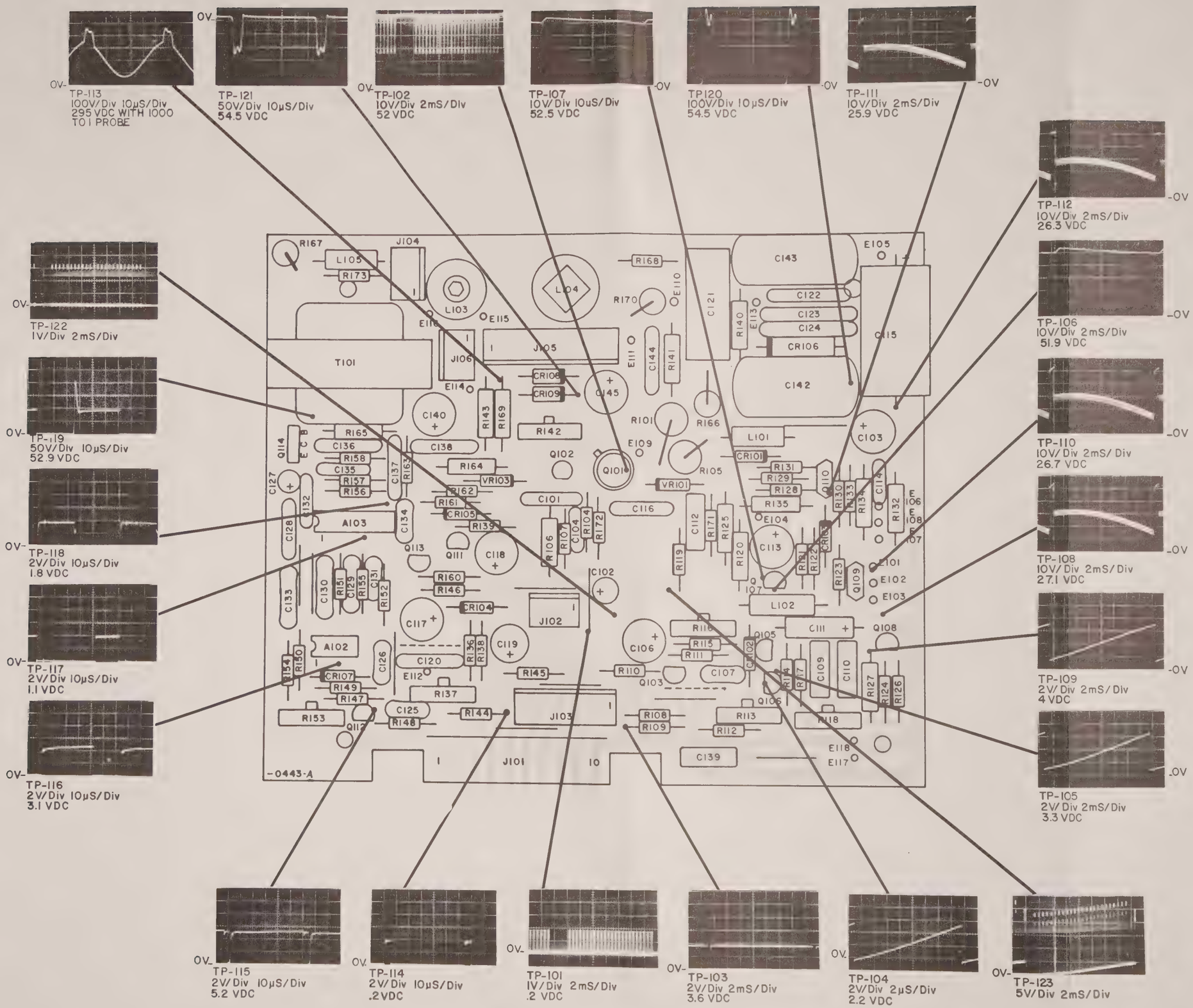

FIGURE 6.5 TTL120/150 WAVEFORMS

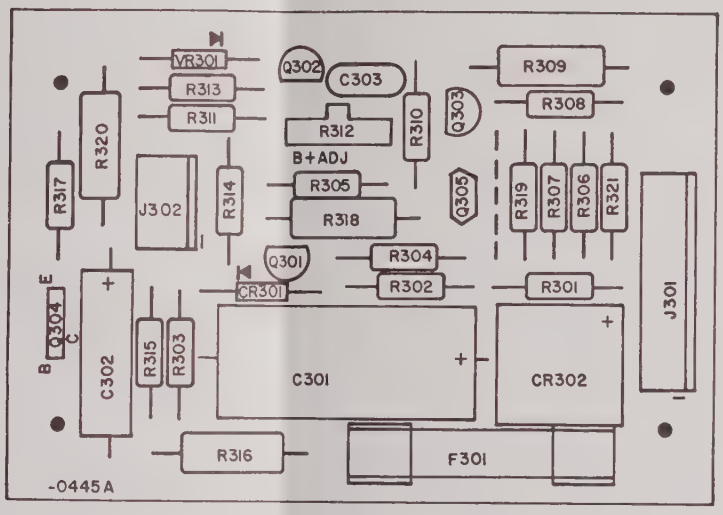

REF SYM	DESCRIPTION	PART NUMBER
	CAP, FIXED uF UNLESS NOTED	
C301	100-100, EA	1-012-2127
C302	10-100, EA	1-012-2115
C303	27pF-500-5, DM	1-012-2161
	CONNECTOR	
J301	CONN 7 PIN MALE	1-039-0145
J302	CONN 3 PIN MALE	1-039-0148
	DIODES	
CR301	D0410	1-021-0410
CR302	VS148 2 AMP	1-021-0413
	FUSE	
F301	FUSE 1.25A-250V	28-13-0125
	RES, FIXED CARBON 1/2W ±5% UNLESS NOTED	
R301	180	1-011-2252
R302	910	1-011-2269
R303	33K	1-011-2306
R304	330	1-011-2258
R305	330	1-011-2258
R306	43K	1-011-2309
R307	30K	1-011-2305
R308	300	1-011-2257
R309	.68-2-10, WW	1-011-2217
R310	2K	1-011-2277
R311	29.4K-1%	1-011-2518

REF SYM	DESCRIPTION	PART NUMBER
R312	VAR 1K-1/4-20%, CO	1-011-5182
R313	3.57K-1%	1-011-2517
R314	8.2K	1-011-2292
R315	1K	1-011-2270
R316	3.6K-1	1-011-2527
R317	10K	1-011-2294
R318	10K-1-10, CO	1-011-2508
R319	150	1-011-2250
R320	150-1-10, CO	1-011-1155
R321	68	1-011-2242
	TRANSISTORS	
Q301	MPS-L51	1-015-1175
Q302	2N5830	1-015-1172
Q303	2N5830	1-015-1172
Q304	MJE340	78-86-0340
Q305	MPS-U04	1-015-1167
	ZENER	
VR301	Z0412	1-021-0412
	MISCELLANEOUS	
	FUSE CLIP (2)	13-14-6008
	PWB	1-029-0445

FIGURE 6.6 COMPONENT LAYOUT LOW VOLTAGE REGULATOR PWA

APPENDIX D

ADM-31 SWITCHING POWER SUPPLY

ADM-31 SWITCHING POWER SUPPLY

Description

The ADM-31 Switching Power Supply is a 52-watt discontinuous mode current-controlled, "flyback" power supply mounted on a single printed circuit board assembly (PCBA). The power supply furnishes four regulated dc voltages: +55/40 volts, +5 volts, and ±12 volts. Standard line voltage is 115 vac; however, the supply can be converted to a line voltage of 230 Vac.

Specifications

The following specifications are applicable to the switching power supply:

SPECIFICATION	DESCRIPTION
Input Requirements:	
Standard	115 Vac ±15%, 60 Hz (nominal) Cold Start Surge Current 10A max.
Optional	230 Vac ±15%, 50 Hz (nominal) Cold Start Surge Current 20A max.
Hold Up Time	20 ms, minimum with nominal input voltage and maximum output power.
+55/40 Volt Output:	
Nominal Load	0.55/0.75 Amperes
Output Voltage	±5%, with +5 volt output = 5.000 ±0.010V and other outputs with nominal loads
Transient Response	Recovery to ±0.2% of nominal voltage within 1.5 ms with current transients per figure D-1
Ripple Voltage	Ripple voltage per figure D-1
Line Regulation	±0.2% with line variation of ±15%

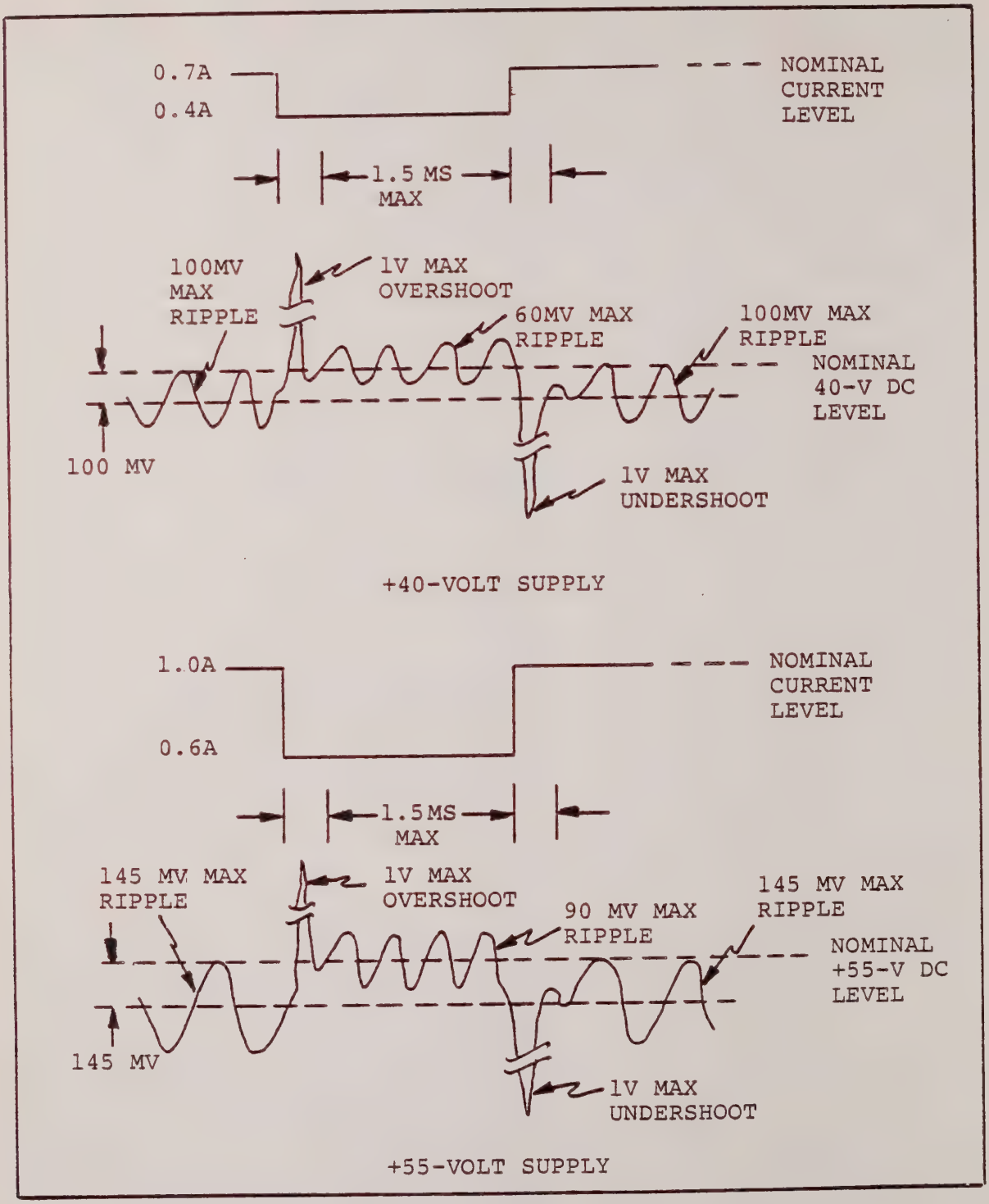

Figure D-1. +55/40 volt Output Transient Response

SPECIFICATIONS (cont'd)

SPECIFICATION	DESCRIPTION
+5 Volt Output:	
Nominal Load	3.0 Amperes
Output Voltage	5.000 +0.25/-0.50 Volts, factory set to 5.000 ±0.010 volts
Load Regulation	±5% with load variation of 33 1/3%
Line Regulation	±0.2% with line variation of ±15%
Ripple Voltage	100 mv p-p, maximum
Overvoltage Protection	6.0 ±0.5 Volts
±12 Volt Output:	
Nominal Load	0.3 Amperes each
Output Voltage	12.0 ±5% with 15 volt output = 5.000 ±0.010V and other outputs with nominal loads
Load Regulation	±5% with load variation of 66.7%
Line Regulation	±0.2% with line variation of ±15%
Ripple Voltage	150 mv p-p, maximum
Environmental Requirements:	
Operating Temperature	50°F (10°C) to 140°F (60°C)
Storage Temperature	-4°F (-20°C) to 185°F (85°C)

THEORY OF OPERATION

General

The power supply operates on the "flyback" principle in which energy is stored and released in a cyclic but nonsymmetrical pattern. The rate of energy storage during the charging portion of the cycle is determined by the circuit constants. The charging time, and thus the amount of energy available to be released depends upon the momentary requirements of the load. Since the four output voltages are regulated, it is the current which is the variable quantity.

Essentially the power supply consists of five functional circuits: Input Filter and Rectifier, Drive and Switch, Modulator, Output Section, and Post Regulator. Refer to the schematic diagram, figure D-3 or D-4.

Note

Figure D-2 pertains to the 115-volt, 60 Hz supply; figure D-3 pertains to the 230-volt, 50 Hz supply. The two supplies are functionally the same except for input voltage and frequency.

Input Filter and Rectifier

The ac input is a fused noise filter followed by a bridge rectifier, capacitor filter, transformer input network, and transformer T1. The input network in conjunction with the transformer inductance comprise the circuit constants which determine the charging rate and charging time.

Drive and Switch, Modulator

Drive and Switch Q1 and Modulator Q2, Q3 control the charging/release cycling of the power supply. Rectified ac power is applied to the base of switch Q1 through resistor R3. The phasing of transformer T1 causes Q1 to be forward biased; the drive current ramps upward at a rate determined by the supply voltage and the inductance of the primary winding of T1. The emitter of Q1 tracks the supply voltage and Q1 furnishes the transformer charging current through capacitor C10 and diode CR4. Resistive divider R7-R8 establish the point at which modulator Q3 (and thus Q2) drives Q1 to cutoff; the charging or storage cycle is thus terminated. All voltages on the transformer windings reverse polarity. The diodes in the output circuit

conduct and deliver current to their outputs. This is the release cycle. Capacitor C9 in conjunction with CR3 and R14 maintain release cycle current in the primary winding. At the end of the release cycle, the transformer voltages again reverse polarity and Q1 is driven back into saturation to initiate a new charging cycle.

Output Section

Each output voltage is developed from the transformer output through a single diode rectifier feeding a capacitor input filter. During the charging cycle these diodes are biased to cutoff and no current is delivered to the external loads. When the transformer polarity reverses to begin the release cycle, these diodes turn on and remain turned on until all the energy stored in the transformer core is transferred to the secondaries. The power supply thus functions much as a blocking oscillator.

Post Regulator

The regulation loop is connected from the +55 volt output through resistive divider R13 to error amplifier A2. The error signal is coupled through opto-isolator A3 to Q3 biasing resistor R8. The +55 volt output is used to close the regulation loop because it is the supply which requires the best transient response. The +5 volt, +12 volt, and 12 volt outputs are semi-regulated outputs which are controlled by the transformer's magnetic coupling.

Current regulation is accomplished by using the output of opto-isolator A3 to accelerate or retard the time required for switch Q3 to become forward biased and conduct to cut off driver Q1. Opto-isolator A3 conducts in proportion to the current through its diode, which is in turn determined by the reaction of error amplifier A3 to transients. If a secondary output is shorted, the resulting surge current will cause amplifier A2 to pulse A3; Q3 will immediately be driven to saturation, cutting off Q1. Charging energy will be cut off, thus cutting off release cycle current. The protective "burping" action is repeated each rectified half cycle for as long as the short remains.

Overvoltage protection for the loads is provided by silicon controlled rectifier SCR1 and regulator diode CR9. The +12 volt output is monitored via the plate circuit of SCR1; the +5 volt output via regulator CR9 in the gate circuit. An overvoltage condition in either output will cause SCR1 to fire, simulating an overcurrent condition. This "crowbar" effect initiates the current regulator's overcurrent "burping" action described above.

Preventive Maintenance

The ADM-31 Switching Power Supply is designed to operate with a minimum of scheduled (preventive) maintenance. A light cleaning from time to time is the only routine maintenance that may be required.

Corrective Maintenance

In the event of power supply malfunction, the corrective maintenance procedures that would be required must be performed only by qualified maintenance personnel who have been approved by LSI. Corrective maintenance consists of operational test, troubleshooting, and removal/replacement. Adjustment of the +5 volt output is a factory procedure.

Operational Test

WARNING

Dangerous voltages are present on the heat sink of the ADM-31 Switching Power Supply. Extreme care should be exercised if the shock hazard shield over the power supply is removed while power is on.

Operational test of the ADM-31 Switching Power Supply consists of checking for the power supply voltages and characteristics listed under Specifications in this appendix. Refer to the ADM-31 assembly drawing and schematic diagram in Section 6 for the location of appropriate test points on the main PCBA where test measurements may be made.

Troubleshooting

The ADM-31 Switching Power Supply furnishes precision dc voltages to several critical areas of the ADM-31. A power supply malfunction can cause erratic or incorrect behavior of the terminal in many ways. Use the troubleshooting guide below in conjunction with the power supply schematic diagram (figure D-3 or D-4) as aids in verifying whether the power supply is or is not the cause of malfunction. The only remedy for a power supply malfunction is replacement of the power supply PCBA.

Removal/Replacement

To remove the power supply PCBA, perform the following steps:

1. Disconnect the ADM-31 from the power source and remove the external interface connection(s) at the rear of the ADM-31.

2. Open the ADM-31 cover by removing the two slot-head screws under the front corners of the terminal base and lifting the cover upwards and rearwards. Rest the cover on the table or desk.

3. Remove the power supply cable and monitor cable connections on the upper surface of the main PCBA.

4. Lift the main PCBA straight up until it is clear of the guide pins. Remove the main PCBA and the protective shield over the power supply.

5. Remove the screw in the center of the lower edge of the power supply PCBA.

6. Slide the power supply PCBA downwards to clear the slots beneath the heads of the two screws in the upper edge of the PCBA. Lift the power supply PCBA out of the terminal.

To replace the power supply PCBA, perform the above procedures in the reverse order.

ADM-31 SWITCHING POWER SUPPLY TROUBLESHOOTING GUIDE

TROUBLE	PROCEDURE
WARNING *Dangerous voltages are present on the heat sink of the ADM-31 Switching Power Supply. Extreme care should be exercised if the shock hazard shield over the power supply is removed while power is on.*	
No output from any of the four supplies	Check power cable connections, input fuse.
Fuse blows again after being replaced	Check for shorted switch Q1; if shorted, Q3 probably bad also. Check diode CR10; if bad, Q1 and Q3 probably bad also. Check for short in transformer T1.
No output from one of the four supplies	Check for open output rectifier CR5, CR6, CR7, CR8.
Low output, all supplies	Check for shorted output rectifier CR5, CR6, CR7, CR8. Check Post Regulator circuit. Check Opto-Isolator A2. Check potentiometer R13.

E.C.O.	LTR	REVISIONS	DATE	APPR.
	O	PRODUCTION RELEASE	12-4-79	CBat
211	A	CR9 WAS IN5231B, R4 WAS 68Ω, R14 WAS 270Ω.	1/25/80	CBat

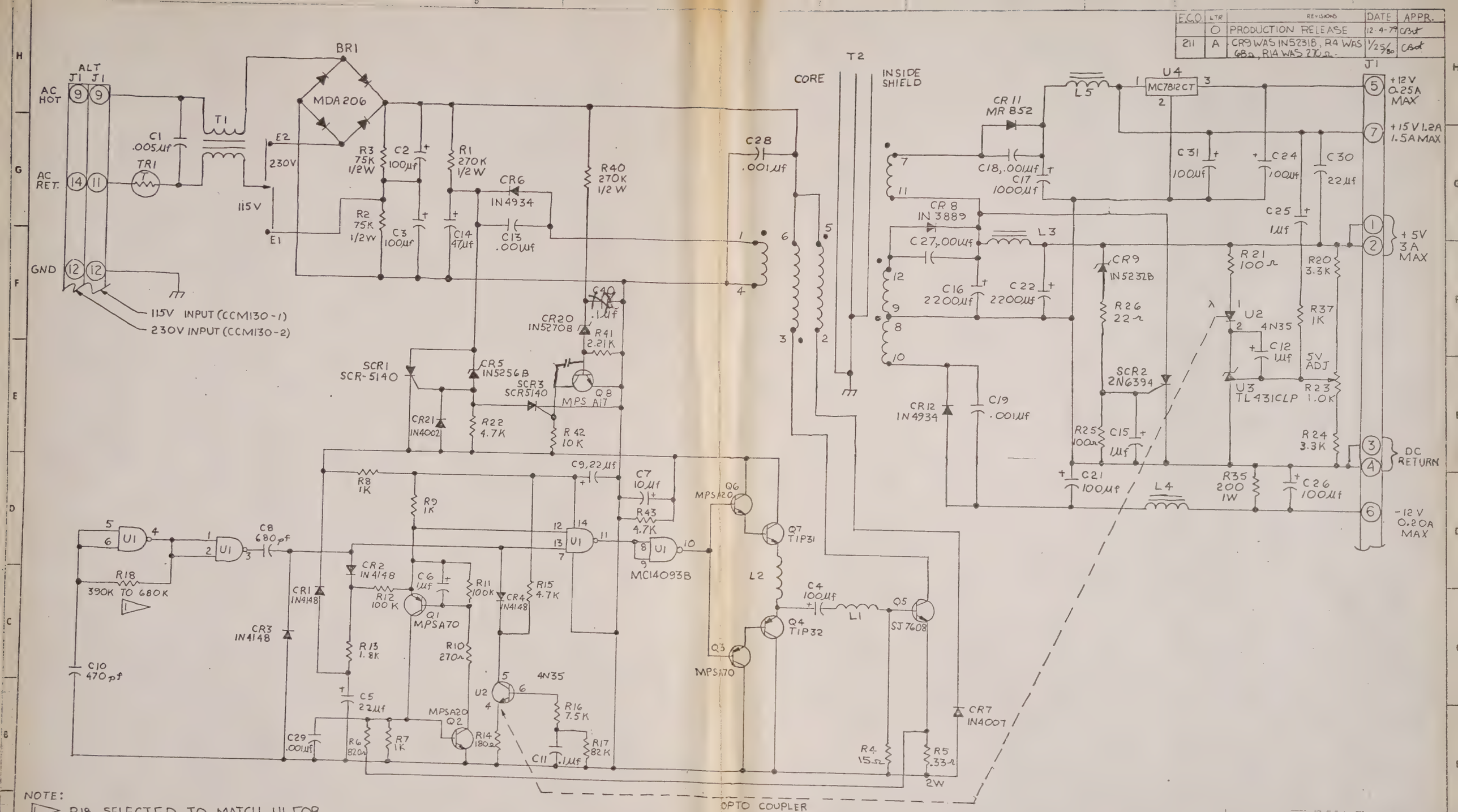

NOTE:
1 R18 SELECTED TO MATCH U1 FOR 25 ±25 KHz OPERATION.

USED ON: CCM 130-1 & CCM130-2
NEXT ASSY: 01DRH00936A001 & 01DRH00936A002

MOTOROLA INC.
Semiconductor Products Group

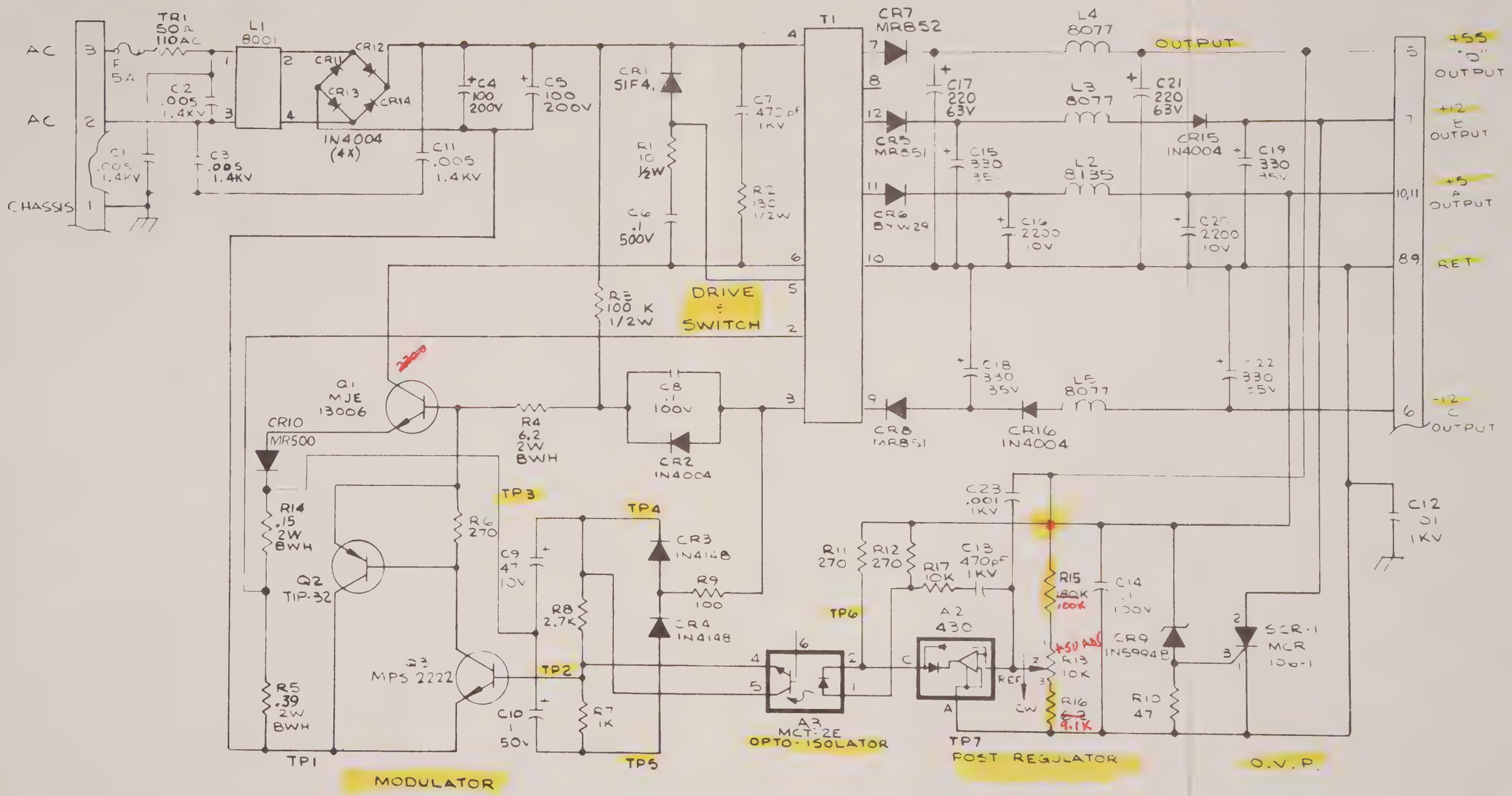

Figure D-3. Switching Power Supply Schematic Diagram (115 Vac Input)

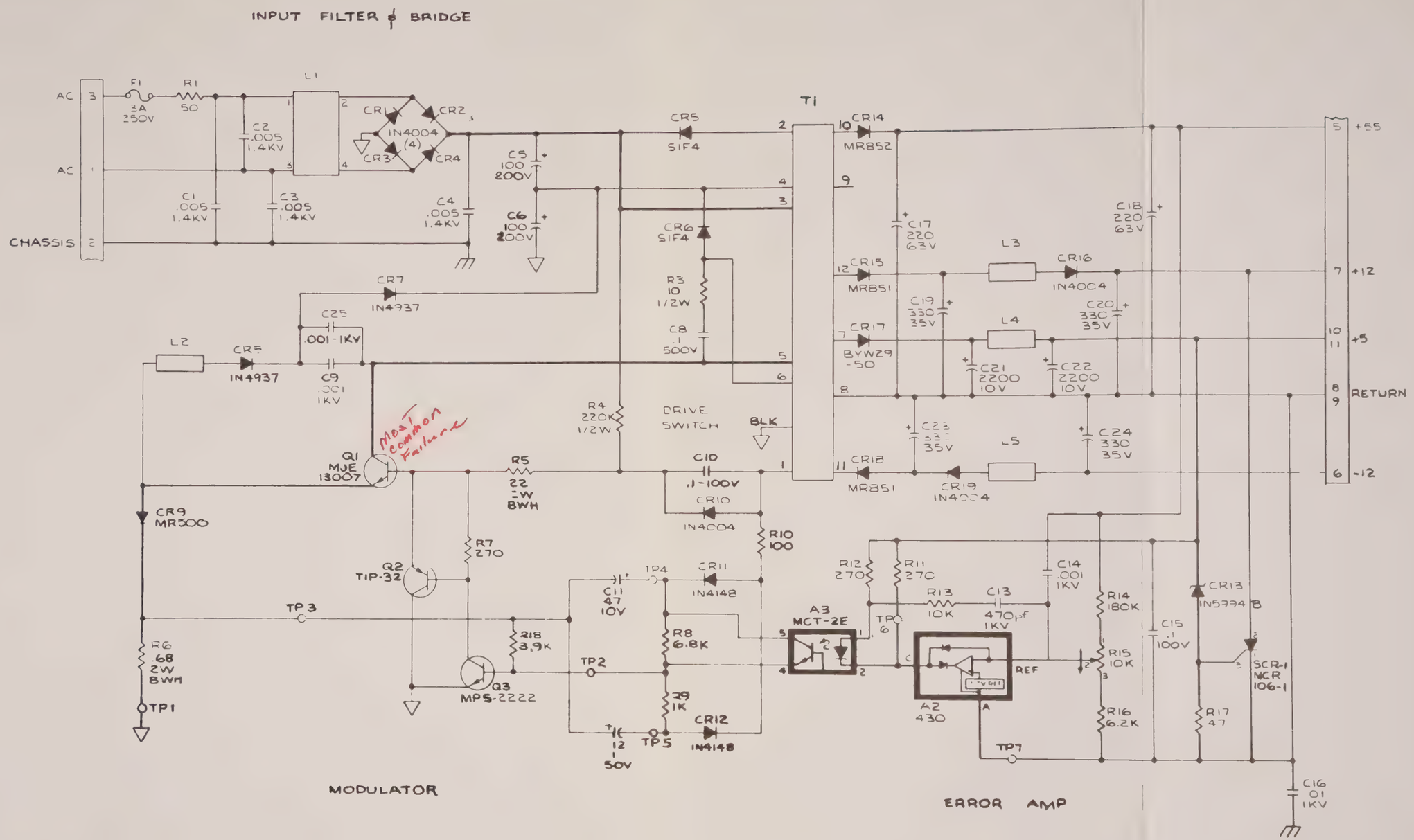

Figure D-4. Switching Power Supply Schematic Diagram (230 Vac Input)

REVISIONS

ECO	LTR	DESCRIPTION	DATE	APPROVED
2103	1	PRE-RELEASED FOR PRODUCTION	6/ RAK	
2123	A	ITEM 28 P/N WAS 2061, ITEM 105, L4 ADDED RELEASED TO PRODUCTION, TRI WAS 3920	7-14-70	9/ MDW
2227	B	ITEM 83, ADDED P/N (NO DES. CHG), ITEM 102 WAS P/N 7741 (NO DES CHG)	9/21/78	SM MDW
2251		ASSY CHG ONLY		

TVA 2249

All drawings supplied for the BOSCHERT power supply are the property of BOSCHERT INCORPORATED and shall not be reproduced or copied or used in whole or in part as the basis for manufacture or sale of the items shown therein without the express written permission of an officer of BOSCHERT INCORPORATED

SEE SEPARATE ASSY, DWG NO. 40127 "D" SIZE

FINAL	49-1001
NEXT ASSY	USED ON
APPLICATION	

UNLESS OTHERWISE SPECIFIED DIMENSIONS ARE IN INCHES TOLERANCES ARE:

FRACTIONS	DECIMALS	ANGLES
± —	.XX ± —	± —
	.XXX ± —	

MATERIAL

FINISH

DO NOT SCALE DRAWING

CONTRACT NO.

APPROVALS	DATE
DRAWN	6-26-78
CHECKED	6-28-78
MDW	
	7-17-78

boschert

ASSEMBLY, POWER SUPPLY
49 WATT 115V

SIZE	CODE IDENT NO.	DRAWING NO.	REV
A		40127	B

SCALE N/A | SHEET 1 OF 6

40127 RKS

BISHOP GRAPHICS/ACCUPRESS REORDER NO. A-8483

REVISIONS			
LTR	DESCRIPTION	DATE	APPROVED

5 FOR OUTLINE INSTALLATION SEE DWG NO. 20249
4. FOR PINOUT CHART SEE DWG. NO 20248
3. FOR QA & TEST SPEC SEE DWG NO. 20253
2. FOR CUSTOMER SCHEMATIC SEE DWG NO. 20247
1. FOR SCHEMATIC SEE 20203

NOTES:

NEXT ASSY	USED ON	UNLESS OTHERWISE SPECIFIED DIMENSIONS ARE IN INCHES TOLERANCES ARE: FRACTIONS ± DECIMALS .XX ± .XXX ± ANGLES ±	CONTRACT NO.	beechert
APPLICATION		MATERIAL	APPROVALS / DRAWN	DATE
		FINISH	CHECKED	ASSEMBLY, POWER SUPPLY 49 W, 115 V
		DO NOT SCALE DRAWING		SIZE A / CODE IDENT NO. / DRAWING NO. 40127 / REV B
				SCALE N/A / SHEET 2 OF 6

BISHOP GRAPHICS/ACCUPRESS
REORDER NO. A-8453

ITEM	PART NO.	QTY	DESCRIPTION	REF DES
1	9219	1	BOARD, P.C.	
2				
3	6059-1	1	HEADER, ASSY 3 PIN	
4	6059-2	1	HEADER, ASSY 7 PIN	
5				
6				
7				
8	7641	1	HEATSINK, TO-220, SPRING CLIP	
9	7647	1	HEATSINK, TO-220, U-CHANNEL	
10				
11	8001	1	INDUCTOR,	L1
12	8135	1	INDUCTOR, LOW CURRENT	L2
13	8077	3	INDUCTOR, SMALL OUTPUT	L3,5,4
14				
15				
16	8184	1	TRANSFORMER, 49W	T1
17				
18				
19	2060	2	CAP, CERM, 470 pF, ± 20%, 1000V	C7,13
20	2002	4	", ", .005 μf, ± 20%, 1.4KV	C1,2,3,11
21	2005	1	", ", .01 μf, ± 20%, 1000V	C12
22	2008	2	", ", .1 μf, ± 20%, 100V	C8,14
23	2003	1	", ", .1 μf, ± 20%, 500V	C6
24				
25				
26				
27	2032	1	CAP, CERM, .001 μf, ± 20%, 1KV	C23

TITLE
POWER SUPPLY
115V 49 WATT

[redacted]

DRAWING NO. 40127

REV B

SIZE A | SCALE N/A | SHEET 3 OF 6

BISHOP GRAPHICS/ACCUPRESS
INFORDER NO A-8449

ITEM	PART NO.	QTY	DESCRIPTION	REF DES
28	2089	2	CAP, ELECT, 100μF, +75%-10%, 200V	C4,5
29	2083	4	, , , 330μF, +75%-10%, 35V	C15,18,19,22
30	2106	1	, , , 47μF, +75%-10%, 10V	C9
31	2051	2	, , , 220μF, -10% +50%, 63V	C17,21
32				
33	2047	2	, ELECT, 2200μF, +50%-10%, 10V	C16,20
34				
35				
36	2076	1	CAP, TANT, 1μF, ±10%, 50V	C10,
37				
38				
39	1038	7	DIODE, GEN PUR, IN4004	CR2,11 THRU 16
40	1028	1	, , , SIF4	CR1
41	1153	1	, , , MR500	CR10
42	1013	2	, GEN PUR, IN4148	CR3,4
43				
44				
45	1140	1	, FAST RECV, BYW29-50	CR6
46			,	
47	1042	1	, , MR852	CR7
48	1088	2	, FAST RECV, MR851	CR5,8
49				
50				
51	1014	1	DIODE, ZENER, IN5994B	CR9
52				
53				
54				

TITLE: POWER SUPPLY 115V, 49 WATT

beechert

DRAWING NO. 40127 REV B

SIZE A SCALE N/A SHEET 4 OF 6

BISHOP GRAPHICS/ACCUPRESS
REORDER NO. A-8452

ITEM	PART NO.	QTY	DESCRIPTION	REF DES
55	1132	1	SCR, MCR106-1	SCR-1
56				
57	1001	1	I.C, OPTO-ISOLATOR, MCT-2E	A3
58	1071	1	I.C, VOLTAGE REG, 430	A2
59				
60				
61	1083	1	TRANS, NPN, POWER, MJE 13006	Q1
62	1055	1	TRANS, NPN, AMPL, MPS-2222	Q3
63	1146	1	TRANS, PNP, TIP32	Q2
64				
65				
66	7011	1	FUSE, SUB-MINI, 5A	F1
67				
68				
69	3126	1	RES, C.F., 180K, ±5%, 1/4W	R15
70	3040	1	" " " 47 " "	R10
71	3048	1	" " " 100 " "	R9
72				
73	3058	3	" " " 270 " "	R6,11,12
74				
75				
76	3072	1	" " " 1K " "	R7
77	3096	1	" " " 10K " "	R17
78	3091	1	" " " 6.2K " "	R16
79				
80				
81	3082	1	RES, C.F., 2.7K, ±5%, 1/4W	R8

TITLE
POWER SUPPLY
115V, 49 WATT

heathkit

DRAWING NO. 40127 REV B

SIZE A SCALE N/A SHEET 5 OF 6

BISHOP GRAPHICS/ACCUPRESS

ITEM	PART NO.	QTY	DESCRIPTION	REF DES
82	3251	1	RES, C.F., 130 , ±5%, 1/2 W	R2
83	3224	1	, C.F., 10 , ±5%, 1/2W	R1
84	3320	1	, C.F., 100K , ±5%, 1/2 W	R3
85				
86	3832-9	1	, C.C., 6.2 , ±10%, 2W. BWH	R4
87				
88	3827	1	, W.W., .39 , ±10%, 2W BWH	R5
89	3801	1	, ,, .15 , ±10%, 2W BWH	R14
90				
91				
92	3944	1	, POT, 10K	R13
93				
94	3900	1	RES, 50Ω, THERMISTOR	TR1
95				
96				
97				
98	4002	1	SOCKET 8 PIN OPTO-ISOL	
99				
100				
101	7740	1	LABEL, DANGER HIGH VOLTAGE	
102	7881	1	LABEL, MODEL & SERIAL NUMBER	
103				
104	7508	2	SCREW, B.H. 4-40 X 3/8 LG	
105	7505	1	WASHER, FLAT #4	
106				
107				
108				

TITLE		DRAWING NO.	REV
POWER SUPPLY 115V, 49 WATT	hoobert	40127	B
		SIZE A / SCALE N/A	SHEET 6 OF 6

BISHOP GRAPHICS/ACCUPRESS
REORDER NO. A-8452

REV.	DESCRIPTION	ECO	DATE	APPROVED
1	PRE-REL. FOR PROD	2103	6-27-78	[illegible]
A	ARTWORK REVISED REL FOR PROD. TRI-WAS 10 IL	2123	7-14-78	[illegible]
B	ADDED POLARITY OF C17, 21, 22	2227	9-21-78	[illegible]
	CORRECTED ECO 2227	2251		

DWG NO 40127 REV

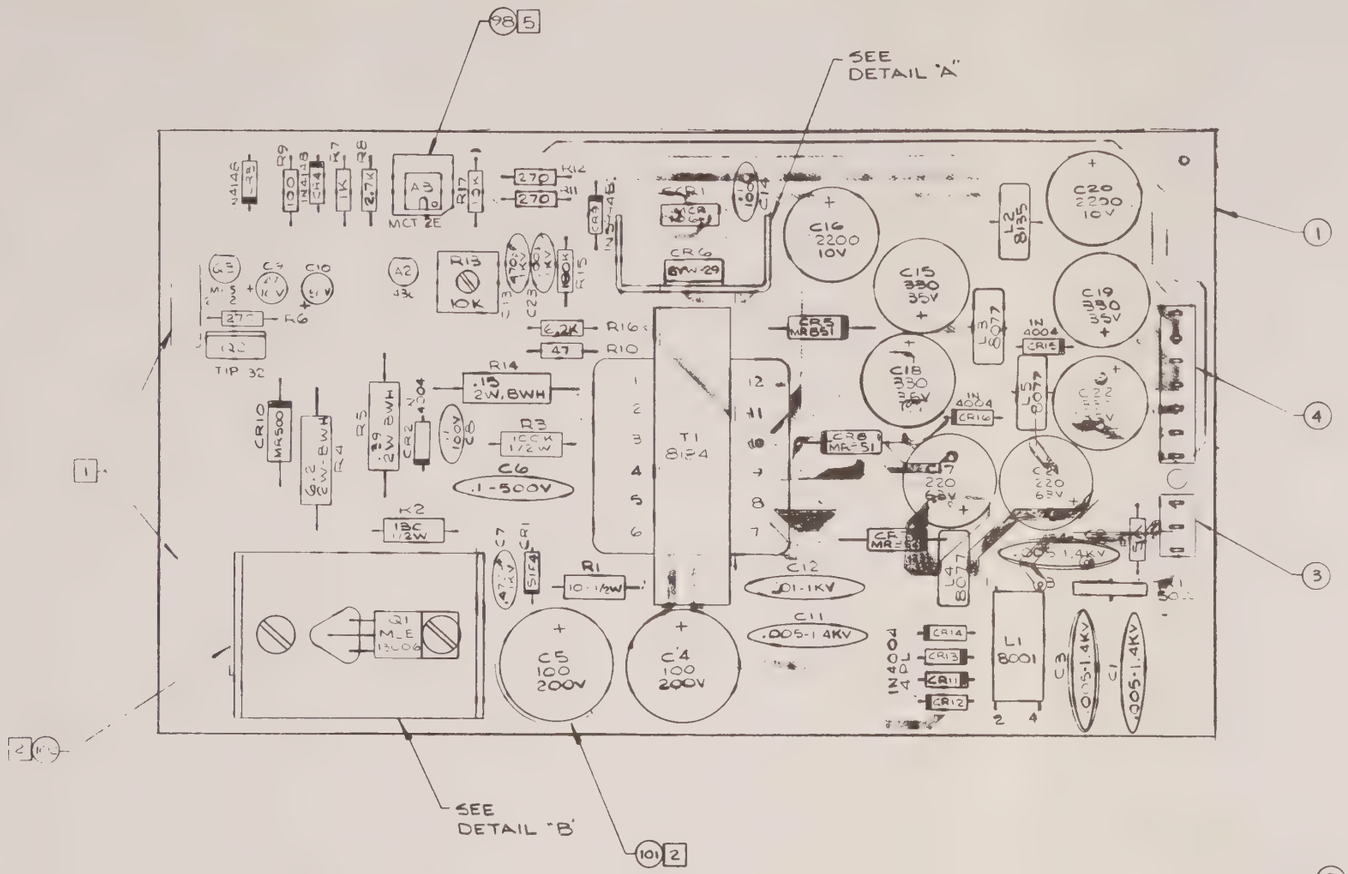

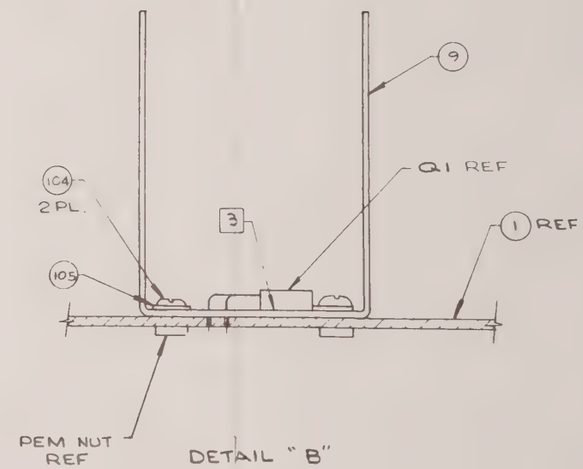

DETAIL "B"

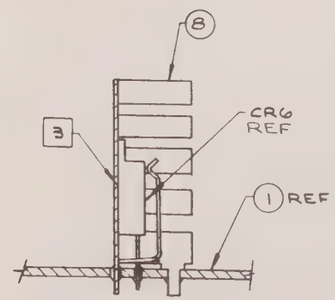

DETAIL "A"

NOTES:

1. APPLY IDENT ASSY NO. & CURRENT REVISION LETTER IN APPROX. LOCATION SHOWN.
2. APPLY LABELS IN APPROX POSITION SHOWN.
3. APPLY A THIN COAT OF HEATSINK COMPOUND, P/N 7765 BEFORE ASSY, WHERE REQUIRED.
4. ALL RESISTORS 2 WATT, AND ABOVE MUST BE MOUNTED .15 MIN. ABOVE BOARD.
5. MOUNT A3 (MCT-2E) IN POSITION SHOWN OF 8 PIN SOCKET (ITEM 98).
6. APPLY SHINK TUBING P/N 7823, OVER C2,3

SEE SEPARATE LM, DWG NO. 40127 A" SIZE

ITEM	QTY	PART NUMBER	DESCRIPTION	REF DESIGNATION

UNLESS OTHERWISE SPECIFIED DIMENSIONS ARE IN INCHES
TOLERANCES
DECIMALS (.XX) ± — FRACTIONS ± —
DECIMALS (.XXX) ± — ANGLES ± —

NEXT ASSY	MOD NO.
FINAL	49-1001

DO NOT SCALE DRAWING

All drawings supplied for the BOSCHERT power supply are the property of BOSCHERT INCORPORATED and shall not be reproduced or copied or used in whole or in part as the basis for manufacture or sale of the items shown therein without the express written permission of an officer of BOSCHERT INCORPORATED.

APPROVALS: DATE
DRAWN FRANK KRALOVETZ 6-26-78
CHECKED [illegible] 6-26-78
ENG [illegible] 7-27-78
ENG MGR
MFG MGR
QA MGR [illegible] 7-17-78
RELEASED [illegible] 7-27-78

boschert BOSCHERT ASSOCIATES SUNNYVALE, CALIFORNIA

ASSEMBLY
POWER SUPPLY
49 WATT, 115 V

SIZE D | DWG NO 40127 | REV B
SCALE 2:1 | SHEET 1 OF 1

REVISIONS

REV	ECO	DESCRIPTION	DATE	APPROVED
1		PRE-REL FOR PRODUCTION	9-7-78	[signature]
A	2307	ITEM 56 WAS P/N 1083, ITEM 94 WAS 7508 QTY-2, ADDED ITEM 93 REL. TO PROD., ADDED ITEM 96	10/1[illegible]	MDW

All drawings supplied for the BOSCHERT power supply are the property of BOSCHERT INCORPORATED and shall not be reproduced or copied or used in whole or in part as the basis for manufacture or sale of the items shown therein without the express written permission of an officer of BOSCHERT INCORPORATED.

SEE SEPARATE ASSY DWG NO. 40144 "D" SIZE.

NEXT ASSY	USED ON
	49-2002

APPLICATION

UNLESS OTHERWISE SPECIFIED DIMENSIONS ARE IN INCHES TOLERANCES ARE:
FRACTIONS ± ___ DECIMALS .XX ± ___ ANGLES ± ___
.XXX ± ___

MATERIAL

FINISH

DO NOT SCALE DRAWING

CONTRACT NO.

APPROVALS	DATE
DRAWN R. ISHIBASHI	8-30-78
CHECKED [signature]	9-7-78
MDW	[illegible]
[signature]	10-5-78
[signature]	10/5/78
G. Jackson	10/11/78

boschert

L/M POWER SUPPLY
MODEL: 49-2002 220V

SIZE	CODE IDENT NO.	DRAWING NO.	REV
A		40144	A

SCALE N/A

SHEET 1 OF 6

40144 REG

BISHOP GRAPHICS/ACCUPRESS
REORDER NO. A-8453

REVISIONS				
REV	ECO	DESCRIPTION	DATE	APPROVED

1. REFERENCE DRAWINGS:
   - SCHEMATIC DWG NO. 20359
   - CUST SCHEMATIC DWG NO. 20360
   - TEST SPECIFICATION DWG NO. 20363
   - Q A SPECIFICATION DWG NO. 20364
   - PIN OUT CHART DWG NO. 20314
   - OUTLINE INSTALLATION DWG NO. 20362

NOTES:

NEXT ASSY	USED ON	UNLESS OTHERWISE SPECIFIED DIMENSIONS ARE IN INCHES TOLERANCES ARE: FRACTIONS ± DECIMALS .XX ± .XXX ± ANGLES ±	CONTRACT NO.	hesehert
APPLICATION		MATERIAL	APPROVALS / DATE	L/M POWER SUPPLY MODEL: 49-2002
		FINISH	DRAWN	
		DO NOT SCALE DRAWING	CHECKED	

SIZE	CODE IDENT NO.	DRAWING NO.	REV
A		40144	A
SCALE N/A		SHEET 2 OF 6	

BISHOP GRAPHICS/ACCUPRESS
REORDER NO. A-8453

ITEM	PART NO.	QTY	DESCRIPTION	REF DES
1	9223	1	BOARD P.C.	
2				
3	7641	1	HEATSINK , CLIP ON	
4	7647	1	HEATSINK , U-CHANNEL	
5				
6				
7	8205	1	TRANSFORMER	T1
8				
9				
10	8001	1	INDUCTOR	L1
11	8215	1		L2
12	8077	2		L3,5
13	8135	1	INDUCTOR	L4
14				
15				
16	2060	1	CAP , CERM , 470pf , ±20% , 1000V	C13
17	2002	4	, , .005uf , , 1400V	C1-4
18	2032	3	, , .001uf , , 1000V	C9,14,25
19	2005	1	, , .01uf , , 1000V	C16
20	2008	2	, , .1uf , , 100V	C10,15
21	2003	1	, CERM , .1uf , ±20% , 500V	C8
22				
23	2106	1	, ELECT , 47uf , +50% -10% , 10V	C11
24	2089	2	, , 100uf , +85% -25% , 200V	C5,6
25	2051	2	, , 220uf , +50% -10% , 63V	C17,18
26	2083	4	, , 330uf , +50% -10% , 35V	C19,20,23,24
27	2047	2	CAP , ELECT , 2200uf , +50% -10% , 10V	C21,22

TITLE		DRAWING NO.	REV
L/M POWER SUPPLY MODEL : 49-2002	keithley	40144	A
		SIZE A / SCALE N/A	SHEET 3 OF 6

BISHOP GRAPHICS/ACCUPRESS
REORDER NO. A-8452

ITEM	PART NO.	QTY	DESCRIPTION	REF DES
28				
29				
30	2076	1	CAP , TANT , 1uf , ±10% , 50V	C12
31				
32				
33	1038	7	DIODE , GEN PUR , IN4004	CR1-4,10,16,19
34				
35	1013	2	, FAST RECV , IN4148	CR11,12
36	1155	2	, FAST RECV , IN4937	CR7,8
37	1042	1	, FAST RECV , MR852	CR14
38				
39	1014	1	DIODE , ZENER , IN5994B	CR13
40				
41				
42	1153	1	RECTIFIER GEN PUR MR500	CR9
43				
44	1028	2	FAST RECV SIF4	CR5,6
45	1140	1	FAST RECV BYW29-50	CR17
46	1088	2	RECTIFIER FAST RECV MR851	CR15,18
47				
48				
49	1132	1	SCR , MCR106-1	SCR-1
50				
51				
52	1001	1	I.C. , OPTO-ISOLATOR , MCT-2E	A3
53	1071	1	I.C. , VOLTAGI REG , 430	A2
54				

TITLE
L/M POWER SUPPLY
MODEL : 49-2002

beschert

DRAWING NO. 40144 REV A

SIZE A SCALE N/A SHEET 4 OF 6

BISHOP GRAPHICS/ACCUPRESS
REORDER NO. A-8452

ITEM	PART NO.	QTY	DESCRIPTION	REF DES
55				
56	1118	1	TRANS , NPN , MJE 13007	Q1
57	1055	1	TRANS , NPN , MPS 2222	Q3
58	1146	1	TRANS , PNP , TIP-32	Q2
59				
60				
61	3040	1	RES , C.F. , 47 , ±5% , 1/4W	R17
62	3048	1	, , 100 , ,	R10
63	3058	3	, , 270 , ,	R7,11,12
64	3072	1	, , 1K , ,	R9
65	3086	1	, , 3.9K , ,	R18
66	3091	1	, , 6.2K , ,	R16
67	3092	1	, , 6.8K , ,	R8
68	3096	1	, , 10K , ,	R13
69	3126	1	, , 180K , , 1/4W	R14
70				
71				
72	3224	1	, , 10 , , 1/2W	R3
73	3328	1	, C.F. , 220K , ±5% , 1/2W	R4
74				
75				
76	3832-6	1	, WW , .68 , ±10% , 2W BWH	R6
77	3810	1	RES , WW , 22 , ±10% , 2W BWH	R5
78				
79	3944	1	RES , POT , 10K	R15
80				
81	3900	1	RES , THERMISTOR , 50Ω	R1

TITLE
L/M POWER SUPPLY
MODEL : 49-2002

boschert

DRAWING NO. 40144 REV A

SIZE A SCALE N/A SHEET 5 OF 6

BISHOP GRAPHICS/ACCUPRESS
REORDER NO. A-8452

ITEM	PART NO.	QTY	DESCRIPTION	REF DES
82				
83				
84	7013	1	FUSE, 3A, 250V	F1
85	7015	2	FUSE CLIP	
86				
87	4002	1	SOCKET, 8 PIN	
88				
89				
90	7740	1	LABEL, DANGER HIGH VOLTAGE	
91	7881	1	LABEL, MODEL & SERIAL NO.	
92				
93	7578	1	SCREW, B.H., 4-40 x 1/4	
94	7671-2	1	SCREW, B.H., 4-40 x 5/16 LG	
95	7505	1	WASHER, FLAT #4	
96	7820-1	A/R	SLEEVING, TEFLON	
97				
98	7974	1	WIRE, 22 AWG, BARE, .40 LG	
99	7959	2	WIRE, 22 AWG, BARE, .50 LG	
100	7963	1	WIRE, 22 AWG, BARE, 1.00 LG	
101				
102				
103	6023	1	HEADER ASSY, 3 PIN, CONNECTOR	
104	6059-2	1	HEADER ASSY, 7 PIN, CONNECTOR	
105				
106				
107				
108				

TITLE
L/M POWER SUPPLY
MODEL: 49-2002

DRAWING NO. 40144 REV A

SIZE A SCALE N/A SHEET 6 OF 6

BISHOP GRAPHICS/ACCUPRESS
REORDER NO. A-8452

REV	DESCRIPTION	ECO	DATE	APPROVED
1	PRE-REL FOR PROT.		[illegible]	
A	ADDED NOTE 7 REL TO PROD	[illegible]	[illegible]	

DWG NO 40144

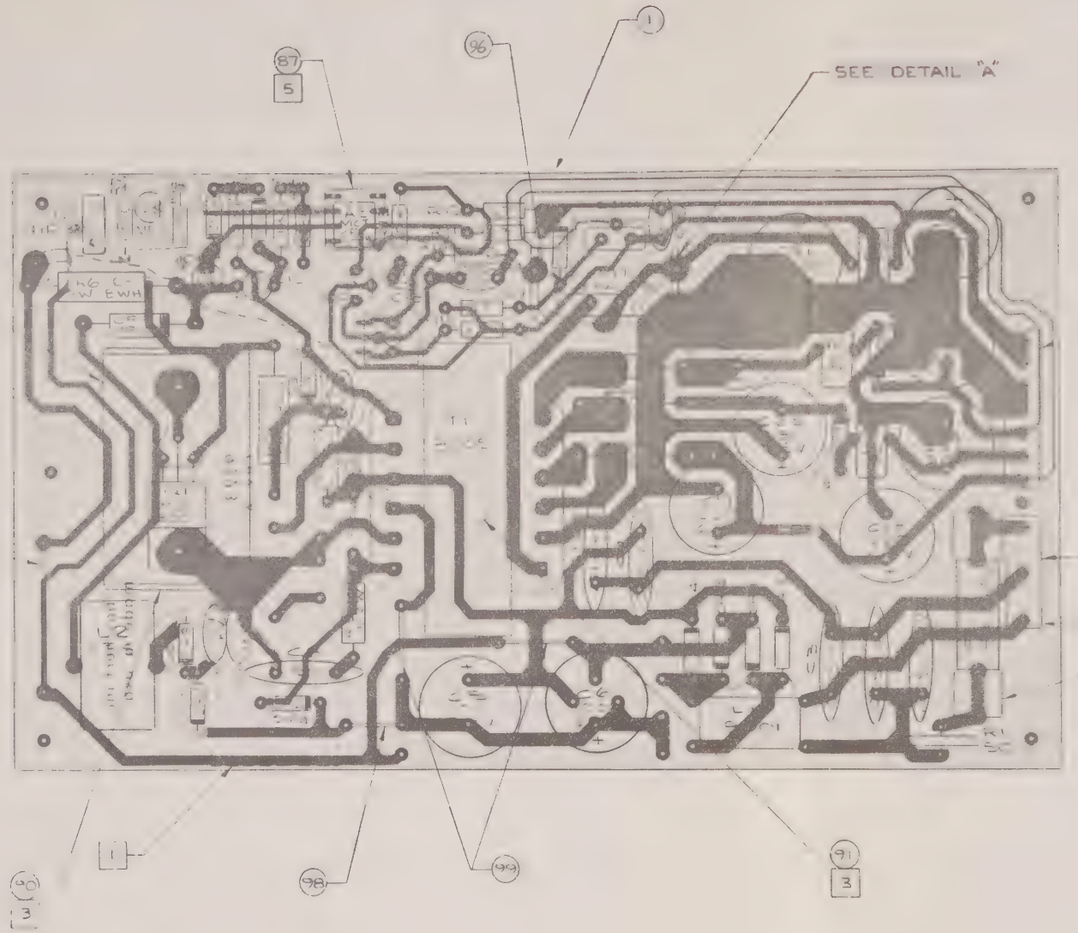

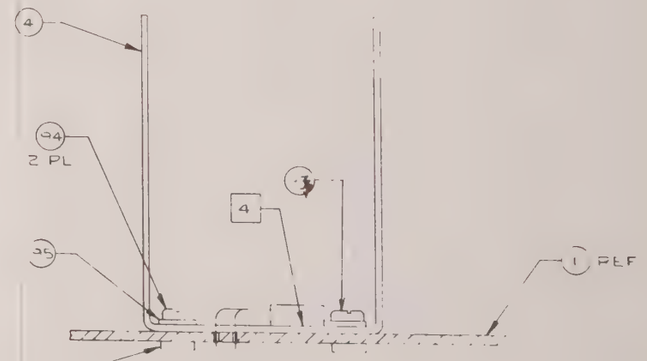

DETAIL "B"
Ex 1

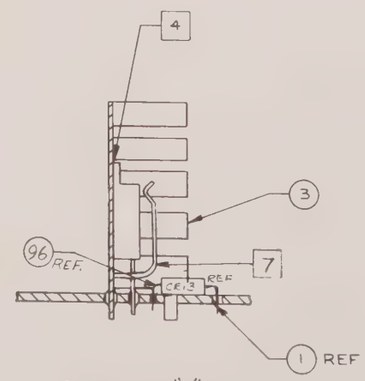

DETAIL "A"
CR17

7 ELEVATE HEATSINK TO CLEAR CLIP FROM CR13 LEAD.

6. ALL RESISTORS 2 WATT AND ABOVE MUST BE MOUNTED .15 INCHES ABOVE BD.

5 MOUNT A3 (MCT-2E) IN POSITION SHOWN OF 8 PIN SOCKET (ITEM 87)

4 APPLY A THIN COAT OF HEATSINK COMPOUND, P/N 7765, BEFORE ASSEMBLY.

3 APPLY LABELS IN APPROX. POSITION SHOWN.

2. FOR REFERENCE DWGS SEE SHEET TWO OF L/M.

1 APPLY IDENT NO. AND CURRENT REVISION LEVEL (NO. OR LETTER) IN APPROX LOCATION SHOWN.

NOTES:

All drawings supplied for the BOSCHERT power supply are the property of BOSCHERT INCORPORATED and shall not be reproduced or copied or used in whole or in part as the basis for manufacture or sale of the items shown therein without the express written permission of an officer of BOSCHERT INCORPORATED

ITEM	QTY	PART NUMBER	DESCRIPTION	REF DESIGNATION

UNLESS OTHERWISE SPECIFIED DIMENSIONS ARE IN INCHES.
TOLERANCES
DECIMALS (.XX) ± — FRACTIONS ±
DECIMALS (.XXX) ± — ANGLES ±

NEXT ASSY	MOD NO.
	49-2002

DO NOT SCALE DRAWING

APPROVALS		DATE
DRAWN	[illegible]	[illegible]
CHECKED	[illegible]	[illegible]
ENG	[illegible]	[illegible]
ENG MGR	[illegible]	[illegible]
MFG MGR	[illegible]	[illegible]
QA MGR	[illegible]	[illegible]
RELEASED	[illegible]	[illegible]

boschert
BOSCHERT
SUNNYVALE, CALIFORNIA

ASSEMBLY
MODEL: 49-2002
220V

SIZE D | DWG NO 40144 | REV A
SCALE N/A | SHEET 1 OF 1

40144 EKL

BISHOP GRAPHICS/ACCUPRESS
REORDER NO A1478

APPENDIX E

FACTORY SERVICE AND MAINTENANCE INFORMATION

APPENDIX E

FACTORY SERVICE AND MAINTENANCE INFORMATION

DEPOT REPAIR

Equipment returned to LSI must be shipped prepaid and must have a Return Goods Authorization (RGA) number on the outside top of the carton or the shipment may be lost, misrouted, or returned to you.

STEP 1

Prepare the following information:

Model type of equipment to be returned
Serial Number
Report Symptom (if failure)
Type of modification or option to be installed (if applicable)

STEP 2

Please call (714) 774-1010 ext. 371 or write to:

Lear Siegler, Inc.
Data Products Division
714 N. Brookhurst St.
Anaheim, CA 92803
Attn: Customer Service

or teletype:

TELEX 655444
TWX 910-591-1157

Please state that you would like a Return Goods Authorization number. At this time, we will record the information you prepared, as well as a purchase order number, if applicable.

STEP 3

You will then be provided with an RGA number and the address of the depot where we request that you return the equipment.

Note

All modifications and repairs are FOB Anaheim, California, Chicago, Illinois, or Philadelphia, Pennsylvania, whichever depot is used. All repairs are warranted for a period of 30 days. The freight responsibility for repairs made on out-of-warranty equipment is that of the customers. Return freight on repairs in warranty is paid by LSI/DPD.

ON-SITE MAINTENANCE

On-site service and maintenance is provided by factory trained service representatives at each of the service cities listed on the following page. Please call your local Lear Siegler Service Representative for more information.

SERVICE CITIES

On-site maintenance for the equipment is available within a ~~50~~ 25 mile radius of the below listed cities.

ALABAMA
- Birmingham

ARIZONA
- Phoenix

ARKANSAS
- El Dorado

CALIFORNIA
- Los Angeles
- Palo Alto
- San Diego
- San Francisco
- Santa Ana
- Stockton
- Ventura

COLORADO
- Denver

CONNECTICUT
- Norwalk

FLORIDA
- Miami
- Orlando
- Tampa

GEORGIA
- Atlanta

ILLINOIS
- Chicago
- Highland
- Peoria

INDIANA
- Indianapolis

IOWA
- Des Moines

KENTUCKY
- Louisville

LOUISIANA
- New Orleans

MARYLAND
- Silver Springs

MASSACHUSETTS
- Boston
- Chicopee

MICHIGAN
- Detroit
- Grand Rapids

MINNESOTA
- Minneapolis

MISSOURI
- Kansas City
- St. Louis

NEBRASKA
- Omaha

NEW JERSEY
- Clifton
- Princeton

NEW MEXICO
- Albuquerque

NEW YORK
- Albany
- Buffalo
- Great Neck, LI
- New York City
- Rochester
- Syracuse

NORTH CAROLINA
- Charlotte
- Greensboro

OHIO
- Cincinnati
- Cleveland
- Columbus

OKLAHOMA
- Oklahoma City

OREGON
- Portland.

PENNSYLVANIA
- Allentown
- Harrisburg
- Philadelphia
- Pittsburgh

SOUTH CAROLINA
- Columbia

TENNESSEE
- Knoxville
- Memphis

TEXAS
- Dallas
- Houston
- Lubbock
- San Antonio

UTAH
- Salt Lake City

VIRGINIA
- Richmond

WASHINGTON
- Seattle

WISCONSIN
- Appleton
- Milwaukee

CANADA
- Montreal
- Toronto
- Vancouver

APPENDIX F

ADM-31 POLLING OPERATIONS

CONTENTS

The material included in this Appendix consists of ADM-31 Polling Operation instructions which are different from the instructions contained in ADM-31 Data Display Terminal Maintenance Manual dated, April, 1979. On those pages of the Maintenance Manual in which changes occur (excluding illustration pages) the lines containing changed data are indicated by revision bars in the outer margin of the page. To facilitate page-by-page substitution of changed pages in the basic manual, the page backing up the changed page is also provided herein.

The pages of the Maintenance Manual containing changes are located in this Appendix as follows:

APPENDIX PAGE	MAINTENANCE MANUAL PAGE
F-4	3-28
F-6	3-40
F-7/8	3-40
F-9 thru F-24	New

Table 3-4. Special Control Operations (cont'd)

CONTROL	PAR. REF.	OPERATION
1. CTRL or SHIFT/CTRL Operations (cont'd)	3.10.1	
KEYS DISPLAY		ASCII CODE (OPERATION)
CTRL x/X C_N		CAN (Cancel)
CTRL y/Y E_M		EM (End of Medium)
CTRL z/Z S_B		SUB (Substitute)
CTRL [E_C		ESC (Escape Sequence)
CTRL \ F_S		FS (File Separator)
CTRL] G_S		GS (Group Separator)
CTRL ^ R_S		RS (Cursor HOME; always to page 1 if AUTO PAGE is set)
CTRL _ U_S		US (New Line)
2. FUNCTION key Operations:	3.10.3	For special-character operations (primarily during CONV MODE) only.
KEYS USED		
FUNCTION/(Character)		Transmits SOH (character) CR.
SHIFT/FUNCTION/ (Character)		Duplicates Block Mode ESC functions (ESC code not transmitted).
3. Personality Control:	3.10.4	
KEYS OPERATION		DESCRIPTION
ESC. 0(HEX) ESC LEAD-IN		Replace escape lead-in character with (HEX) code.
ESC. 1(HEX) END BLOCK		Replace end of block character with (HEX) code.

Table 3-4. Special Control Operations (cont'd)

CONTROL		PAR. REF.	OPERATION
3. Personality Control (cont'd):		3.10.4	
KEYS	OPERATION		DESCRIPTION
ESC. 2(HEX)	2ND END BLOCK		Replace/add end of block character with (HEX) code.
ESC. 3(HEX)	NEW LINE		Replace new line character with (HEX) code.
ESC. 4(HEX)	2ND NEW LINE		Replace/add new line character with (HEX) code.
ESC. 5(HEX)	FLD SEP		Replace field separator character with (HEX) code.
ESC. 6(HEX)	FUN LEAD-IN		Replace FUNCTION key lead-in character with (HEX) code.
ESC. 7(HEX)	PAR ERR		Replace parity error replacement character with (HEX) code.
ESC. 8(HEX)	CLR/ERASE		Replace clear/erase replacement character with (HEX) code.
ESC. 9(HEX)	ENA RTS DELAY		Enable start of RTS delay
ESC. A(HEX)	RTS OFF DELAY		Replace RTS off delay character with (HEX) code.
ESC. B(HEX)	POLL CHAR		Establish certain polling characteristics using (HEX) code.
ESC. C(HEX)	TRANS NO.		Establish number of polling transmissions before recycle.

standard escape character. (The standard character is a bona fide computer character and cannot be changed.) Thus, the terminal will execute an escape sequence in response to the new character, as well as to the standard ESC character. During transmission, the new character will be transmitted in place of the standard character whenever ESC is called for.

NOTE

The dynamic personality change associated with the escape lead-in character is different from the other dynamic personality changes, in that the standard lead-in character cannot be changed, only added to. In all other dynamic personality changes, the standard character is temporarily replaced by the new character.

End Block Characters

"ESC.1 (HEX Code)" changes the standard End Block character to the selected (HEX Code) character. A second End Block character may be added using an "ESC 2 (HEX Code)" character. The second End Block character may be a new line or line feed character if desired. Both End Block characters would be imbedded in the text whenever the first End Block character was called for.

New Line Characters

"ESC.3 (HEX Code)" changes the standard New Line character and "ESC.4 (HEX Code)" adds a second New Line character; in the same manner as for End Block characters, above.

Other Personality Characters

- "ESC.5 (HEX Code)" establishes a new character for the standard Field Separator character.
- "ESC.6 (HEX Code)" establishes a new character for the standard FUNCTION lead-in character.
- "ESC.7 (HEX Code)" establishes a character which would be written on the screen when a parity error is sensed (not provided on standard ADM-31). The parity error character should be one the customer does not normally use.
- "ESC.8 (HEX Code)" establishes a new character for the character previously assigned to a Clear Screen command (usually a space code). The new character may be NULL, period, underline, etc.

- "ESC.9" enables the start of an RTS delay between the RTS (Request to Send) signal and the actual beginning of transmission (CTS) in a Block Mode transmission.

- "ESC.A (HEX CODE)" establishes an RTS OFF delay time which is compatible with the baud rate at which the terminal is operating (in Block Mode only). The standard ADM-31 default RTS OFF delay time is 80 milliseconds, for operation at 110 baud. The following table expresses the recommended RTS OFF delay times in milliseconds for various baud rates, and the (HEX Code) required to obtain the delays (terminal must be in Block Mode).

RECOMMENDED RTS OFF DELAY TIMES					
RTS DELAY (MILLISECONDS)	BAUD RATE	HEX CODE	RTS DELAY (MILLISECONDS)	BAUD RATE	HEX CODE
172	50	AC	5	1800	05
115	75	73	5	2000	05
* 80	110	50	4	2400	04
64	135.5	40	4	3600	04
58	150	3A	3	4800	03
29	300	1D	3	7200	03
15	600	0F	3	9600	03
8	1200	08			

*Standard default setting

- "ESC. [B (HEX)]" establishes certain conditions which are applicable when the Polling Option is in effect. The HEX code identifies a firmware bit which is set = 1 in order to establish the desired condition. Multiple conditions may be established by using the appropriate HEX codes; however, all bits must be set at the same time. ESC. B00 establishes the default (all bits reset) condition.

HEX CODE	BIT SET=1	CONDITION
B01	0	Headers are required in ADM-31 response; otherwise headers are not required (ADM-1 compatible response).
B02	1	Any keyboard key may be used to switch from LOCAL to POLLING mode; otherwise, ~~CONV MODE key must be used.~~ CLEAR
B04	2	Remote FAST SELECT command is conditional; otherwise, is unconditional.

HEX CODE	BIT SET=1	CONDITION
B08	3	Not Used
B10	4	Not Used
B20	5	Not Used
B40	6	Not Used
B07	2,1,0	Headers are required; any key may be used to switch from LOCAL to POLLING Mode; remote FAST Select is conditional.

- "ESC. [C (HEX)]" establishes the number of POLLING transmissions which will be counted before recycling (repeat transmissions do not increment the transmission number). Transmission numbers are sent only if headers are sent. The two character HEX number (00 - 09) establishes the following operations:

C00	Inhibits the transmission number so that it does not appear in the ADM-42 response to a polling inquiry.
C01 thru C09	Establishes the maximum number of transmissions to be counted before recycling. (If the HEX number is 01, the transmission number will alternate between 0 and 1 for each transmission.)

3.10.5 Terminal Control Operations

The ADM-31 keyboard can be disabled locally or disabled by a remote computer using the ASCII code associated with the following keystrokes:

ESC # Disables all keyboard operations.

ESC " Enables keyboard and restores keyboard control.

Disabling the keyboard (ESC #) protects the keyboard against inadvertent operation. Keyboard operation can be restored manually by pressing RESET momentarily. All data will be cleared from memory upon RESET.

3.10.6 Cursor Control Operations

Control of the cursor can be initiated at the keyboard using a CTRL or ESC key sequence. The ESC sequence consists of pressing the ESC key followed by one or more alpha or special character keys. The CTRL operation consists of pressing an alpha character

To Poll A ADM31 Mpu must xmit

EOT

B

B

small P

ENQ

ACK

NAK

CTRL D

ADDRESS

ADDRESS

CTRL E

CTRL F

CTRL U

See para C.1.4

2 Digit Hex ADD.

31 Responds

STX

TEXT

ETX

LRC

CTRL B

Data

CTRL C

C.1 STANDARD (ADM-1) POLLING

When the Polling Option is installed in the ADM-31, the terminal may then act as an ADM-1 compatible polling terminal in a multi point communications network. Multi-Point Contention polling activities are also available. When active in a Polling environment, the ADM-31 is prevented from initiating transmission of traffic (data) except under the control of the network control center. All message transmission is between the network control center and the selcted terminal or terminals; these messages, as well as control of the entire communications network, are controlled entirely by a polling/addressing dialogue initiated by the control center. Within the dialogue, the control center periodically asks or "polls" each device to see if any messages are waiting; if so, the device is commanded to transmit its message in a prescribed format. The control center may also send messages to a specified terminal or terminals at any time.

C.1.1 Setting ADM-31 Address

The ADM-31 Polling Address is a two-character code (A_1A_2) which is part of the Polling Header. Both address characters must be Graphic Displayable ASCII characters; however, both characters are identical. The terminal will recognize and respond to only the specified address. The address is preset by means of a bank of DIP switches on the main PCBA. (See figure 1-5). Each switch in the bank represents one bit in the 7-bit address: SW 1 OFF sets bit 0 (LSB) = 1; SW 2 OFF set bit 1 = 1; etc. SW 8 ON enables Polling activities. The preset switch settings establish the Polling Address for the ADM-31.

C.1.2 Standard (ADM-1) Polling Operations

<u>Setting Up Terminal</u>

The information to be transmitted when the terminal is polled must be entered on the ADM-31 display prior to being polled. Proceed as follows:

1. Press CLEAR KEY to enable data entry from the keyboard.

Note

This requirement may be dynamically altered by means of an escape sequence as described on page C-6 in this appendix.

When Data is Sent. The Keyboard is Locked out until Mpu Sends back ENQ-ACK-NAK
(CTRL E) (CTRL F) (CTRL U)

2. Enter the data just as it is to be transmitted. All editing and embedding of control characters must be done at this time.

3. Select and execute the appropriate SEND activity to enable the ADM-31 response to a POLL inquiry, as follows:

   - SEND LINE, to cause the ADM-31 to send all unprotected characters from the beginning of the line through the cursor position. To send protected as well as unprotected characters, press SHIFT/SEND LINE. This operation is the same as the forced SEND, v (unshifted) or SEND, x (shifted) from the computer.

   - SEND PAGE, to cause the ADM-31 to send all unprotected characters from the beginning of the page through the cursor position. To send protected, as well as unprotected characters, press SHIFT/SEND PAGE. This operation is the same as the forced SEND, w (unshifted) or SEND, y (shifted) from the computer.

The terminal is now ready to transmit. It waits to be polled.

C.1.3 Removing Terminal from Standard Polling Status

Enabling Keyboard

To enable the ADM-31 keyboard for data entry from the keyboard, press the CLEAR key. If the terminal does not return to keyboard operation, press RESET. The computer can override local keyboard operation by executing FAST SELECT or BROADCAST SELECT, if the ADM-31 has been designated as a Broadcast Select Terminal.

Resetting Standard Polling Mode

To set Standard (Compose) Mode from the keyboard, press CLEAR. The ADM-31 will still respond as a polling terminal, in accordance with the setting-up instructions for the terminal. To disable Polling Mode, set POLLING ADDRESS DIP switch SW 8 to OFF and RESET ADM-31.

C.1.4 Initiating Standard Polling Sequence

All polling operations are initiated by the network control center through a standard control sequence. This sequence consists of the following:

1. EOT Character (EOT)

2. Two Address Characters (A_1A_2). In order for the terminal to respond, these characters must match the two identical address characters establish by the K13 DIP switches.

3. A Function Code. This code is an ASCII character, used to identify the transmit operation to be performed by the terminal. It may be one of the following:

p	POLL	v	SEND LINE FOREGROUND
q	SELECT	w	SEND PAGE FOREGROUND
r	SEQUENTIAL SELECT	x	SEND LINE ALL
s	FAST SELECT	y	SEND PAGE ALL
t	BROADCAST SELECT	z	SEND MSG FOREGROUND
		{	SEND MSG ALL

4. ENQ Character (ENQ). This character is present only when a POLL (p), SELECT (q), or SEND (v, w, x, y, z, {) operation is called for.

C.1.5 Standard (ADM-1 Compatible) Responses

POLL Responses (See figure C-1.)

The POLL sequence is initiated by the control center to let the ADM-31 know that the computer is available to receive messages. When the ADM-31 is addressed by the sequence "EOT A_1A_2 p ENQ" the terminal responds as follows:

1. If there is no message waiting to be sent (traffic), the terminal sends an EOT character to the control center and then returns to the IDLE state.

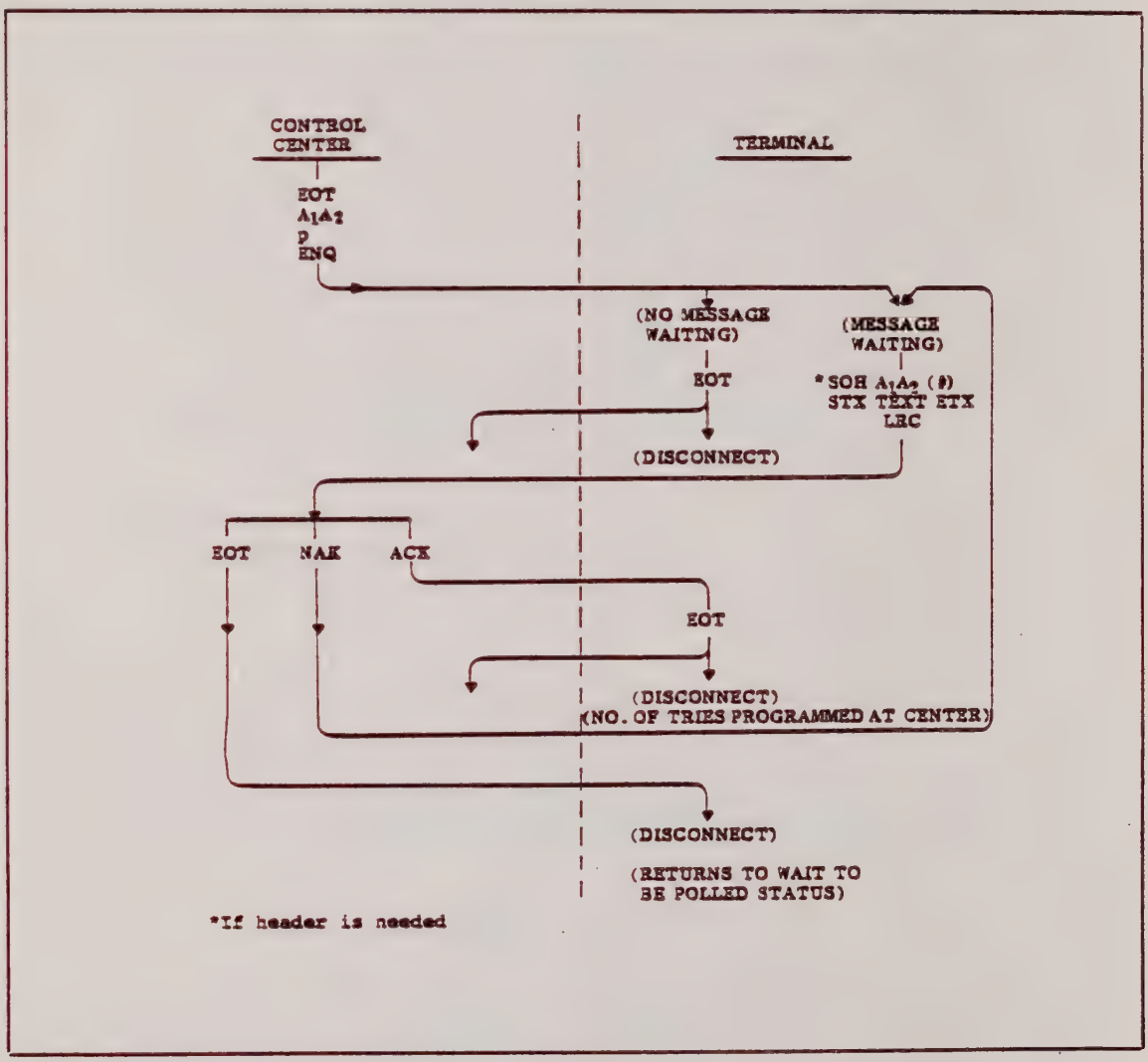

Figure C-1. POLL Function Dialogue, Flow Diagram

2. If there is traffic, the terminal sends the message to the control center in accordance with how the message is prepared, the instructions in the Function Code, and the personality of the terminal.

   a. If the Polling message is to be taken from the display screen or a FUNCTION key SEND, the terminal response is as follows:

      - *SOH Character (SOH).
      - *Two Address Characters (A_1A_2). These characters are the preset terminal address.
      - *Transmission Number (#). This number may be inhibited (by means of an "ESC.C00" sequence) and thus not appear. If enabled, the maximum number of transmissions counted (re-transmissions are not counted) may be between 1 and 9, depending upon the personality selection.
      - STX Character (STX). This character identifies the beginning of the message to be transmitted.
      - Text. This is the message which is written on the screen or the character selected after pressing FUNCTION key. The message is sent in one of two formats, depending on whether or not Protect Mode is set at the terminal, as follows:

        a. Protect Mode Off. All characters except NUL are sent.

        b. Protect Mode On. All foreground characters are sent. Protected data is not sent.

        If the Function Code is a SEND code (v,w,x,y, z, or {) instead of "p" the terminal complies with the instruction as described under SEND Responses, below.

      - ETX Character (ETX). This character designates the end of the polled message.

*If header is needed.

- *LRC Character (LRC). This character represents the modulo 2 sum of the text transmitted, plus the ETX character. It is used by the control center to determine whether or not the text was received correctly.

  b. If the polling message is merely the FUNCTION key character, and headers are not required, the terminal responds: "STX SOH (character) ETX LRC". Note that the (character) is the key depressed after the FUNCTION key.

  c. If the polling message is merely the FUNCTION key character and headers are required, the terminal responds: "SOH A_1A_2 (#) STX SOH (character) ETX LRC".

3. After the ADM-31 has sent the LRC character, it positions the cursor at the original location and waits for the control center to acknowledge receipt of the message. The acknowledgement will consist of one of the following:

   - ACK. The message was received correctly. The terminal will respond by transmitting "EOT" and disconnecting.

   - NAK. The message was received with errors. The terminal will respond by retransmitting the message (transmission number is not incremented) and again waiting for control center acknowledgement. The control center will determine how many transmissions will be called for.

   - EOT. Retransmission is required. The terminal responds by positioning the cursor at the original location and awaiting polling.

SELECT Responses (See figure C-2)

The SELECT sequence is used when the control center wishes to send a message to a single addressed terminal. When the ADM-31 is addressed by sequence "EOT A_1A_2 q ENQ", the terminal responds as follows:

*NOTE: If headers are required, the LRC character is determined by all data following the SOH character and including the ETX character.

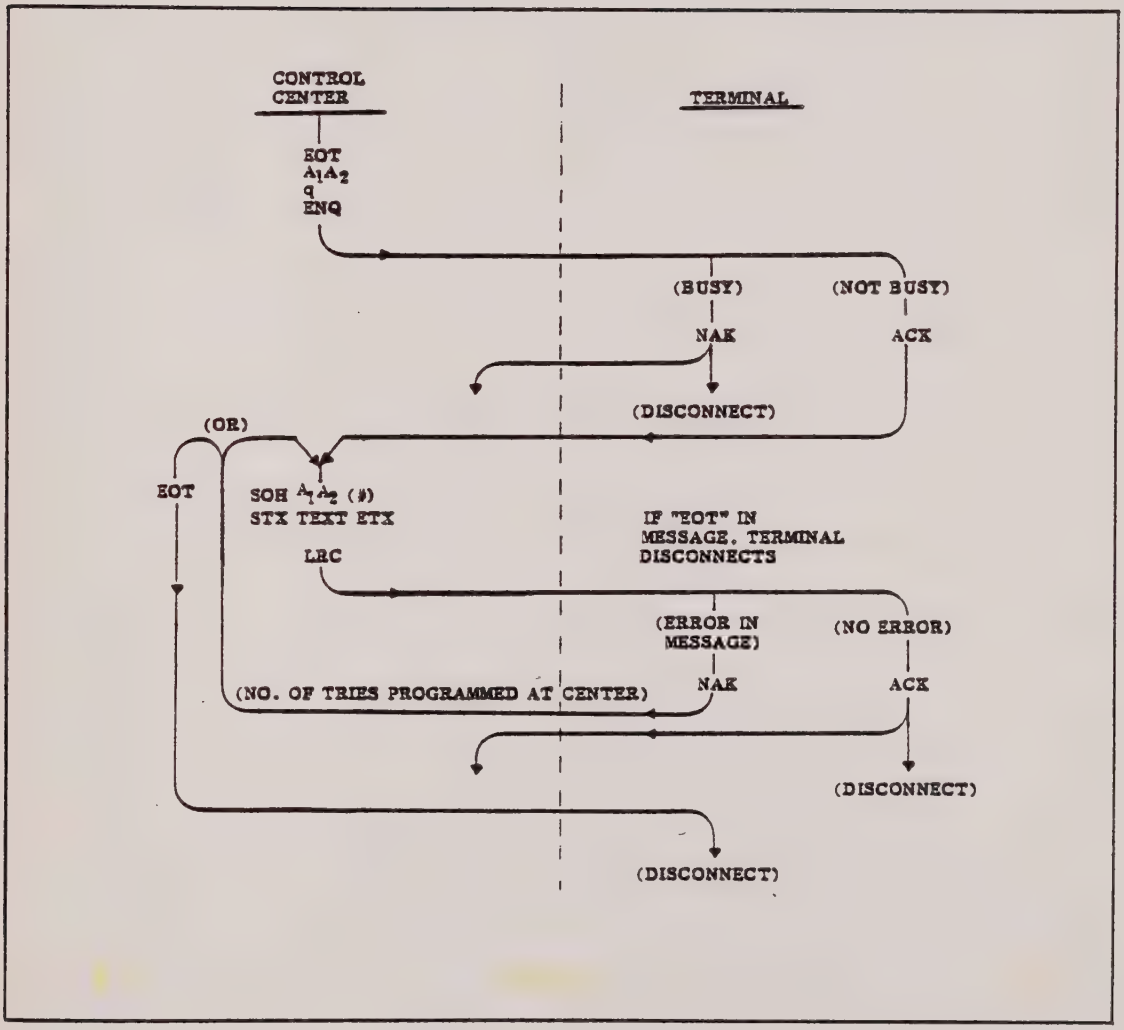

Figure C-2. SELECT Function Dialogue, Flow Diagram

1. If the terminal is BUSY, it sends character NAK, beeps to alert the operator that a message is waiting, then disconnects. BUSY is defined as any of the following states:

   - The terminal is waiting to be polled.
   - The operator is entering data.
   - The terminal is sending data to the printer.

2. If the terminal is not BUSY, it sends character ACK to the control center, and waits for the center to send "SOH A_1A_2 (#) STX TEXT ETX LRC". If there is an EOT in the message, terminal will disconnect to IDLE state.

3. After the selected header is received, the following events occur:

   - If there are no errors, the ADM-31 sends character ACK to the control center, then disconnects to the IDLE or personality state.
   - If there are errors, the ADM-31 sends character NAK to the control center and awaits retransmission of the message.
   - The control center may then retransmit the message, starting with the selected header. If the control center decides not to retransmit, it sends character EOT instead of the selected header; the ADM-31 disconnects to the IDLE state.

<u>SEQUENTIAL SELECT Responses</u> (See figure C-3.)

The SEQUENTIAL SELECT operation is used to sequentially address a number of terminals with a single extended control message. The header sequence is "EOT A_1A_2 r B_1B_2 r....N_1N_2 s". Note that the FAST SELECT (s) Function Code is sent to the last terminal addressed. This code is always followed by "SOH N_1N_2 (#) STX TEXT ETX LRC". The following events take place:

1. All terminals except the last terminal (N_1N_2) test their BUSY status. If BUSY, each terminal will disconnect without responding.

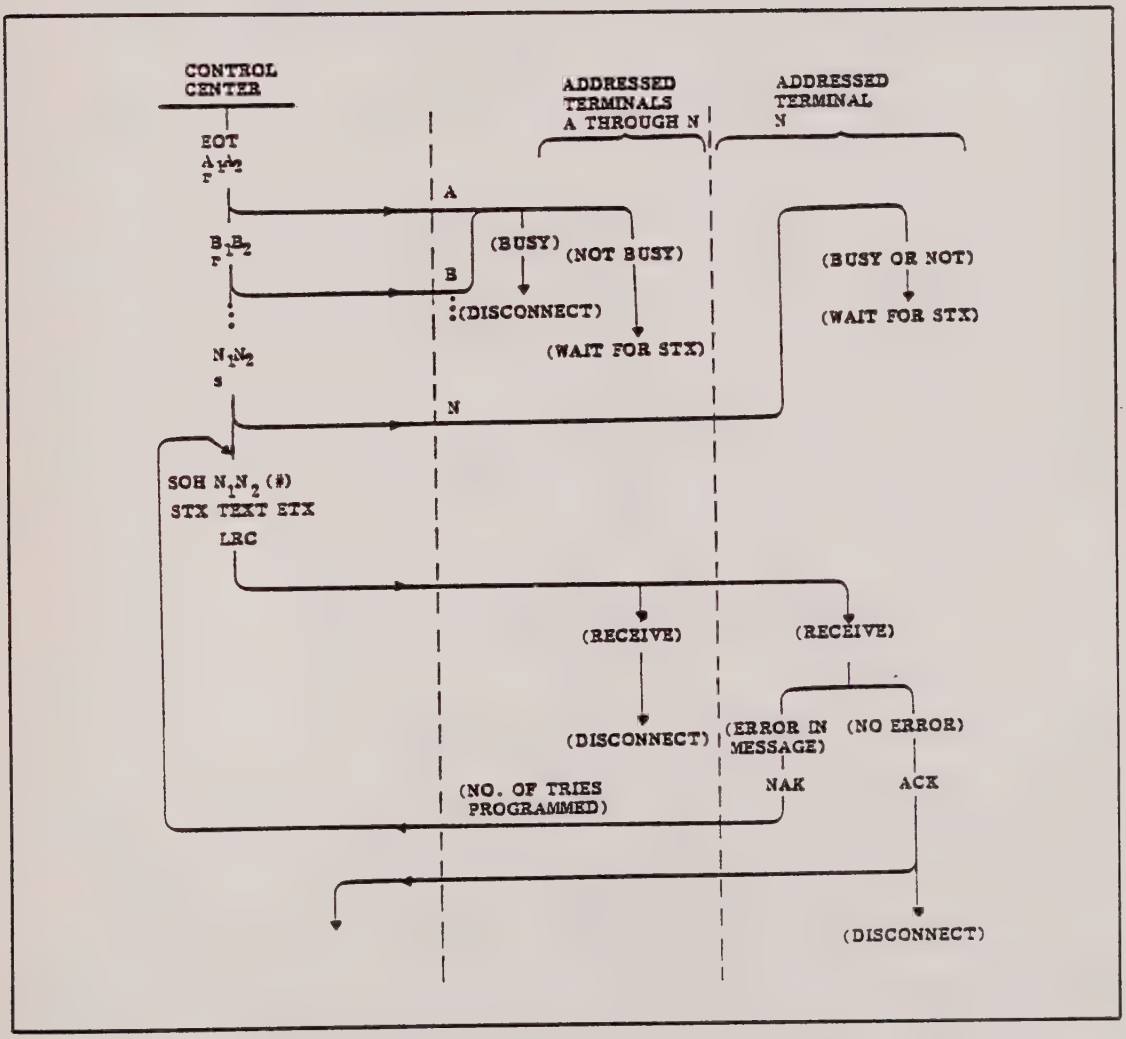

Figure C-3. SEQUENTIAL SELECT Function Dialogue, Flow Diagram

2. Last terminal (N_1N_2) connects unconditionally and waits for an STX character. Any other terminal which is not BUSY connects and waits for an STX character.

3. Following receipt of "...ETX LRC" all addressed terminals except last terminal (N_1N_2) disconnect without responding. Terminal N_1N_2 sends either character ACK or NAK to the control center, then disconnects to IDLE or personality state. The control center decides whether or not to retransmit if NAK is returned.

FAST SELECT Responses (See figure C-4) Over Rides Term. Busy

The FAST SELECT function is used when the control center requires fast, unconditional (see note) selection of a specific terminal. Upon receiving the header sequence (EOT N_1N_2 s), the terminal will unconditionally connect and wait for the message block. The terminal will not respond until after it has received the LRC character. The complete message block code is "SOH N_1N_2 (#) STX Text ETX LRC". After receiving LRC, the terminal sends either ACK or NAK to the control center, then disconnects to IDLE (or personality) state. The control center decides whether or not to retransmit if NAK is returned.

Note

Acceptance of FAST SELECT may be made conditional by executing an escape sequence for changing personality.

BROADCAST SELECT Responses (See figure C-5.)

The BROADCAST SELECT function is used when the control center requires fast, unconditional selection of a number of terminals. All terminals on the line receive the same message under the header sequence. When each terminal receives the sequence "EOT N_1N_2 t" followed by "SOH N_1N_2 (#) STX Text ETX LRC" *it will connect unconditionally,* whether BUSY or not. Following receipt of the sequence, all terminals except the addressed terminal disconnect to the IDLE (or personality) state without responding. The addressed terminal will send either ACK or NAK to the control center, then disconnect to the IDLE (or personality) state. The control center decides whether or not to retransmit if NAK is returned.

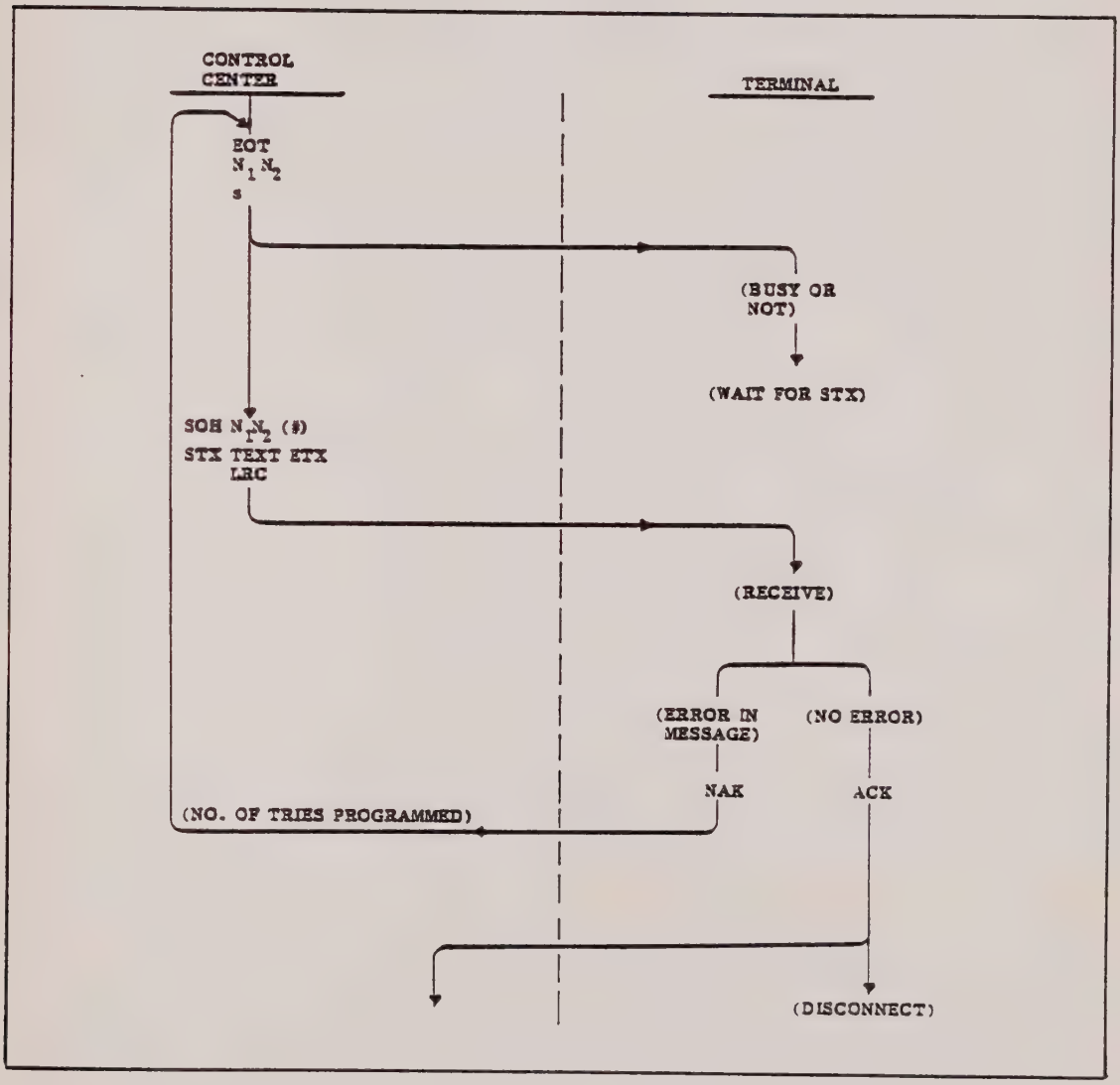

Figure C-4. FAST SELECT Function Dialogue, Flow Diagram

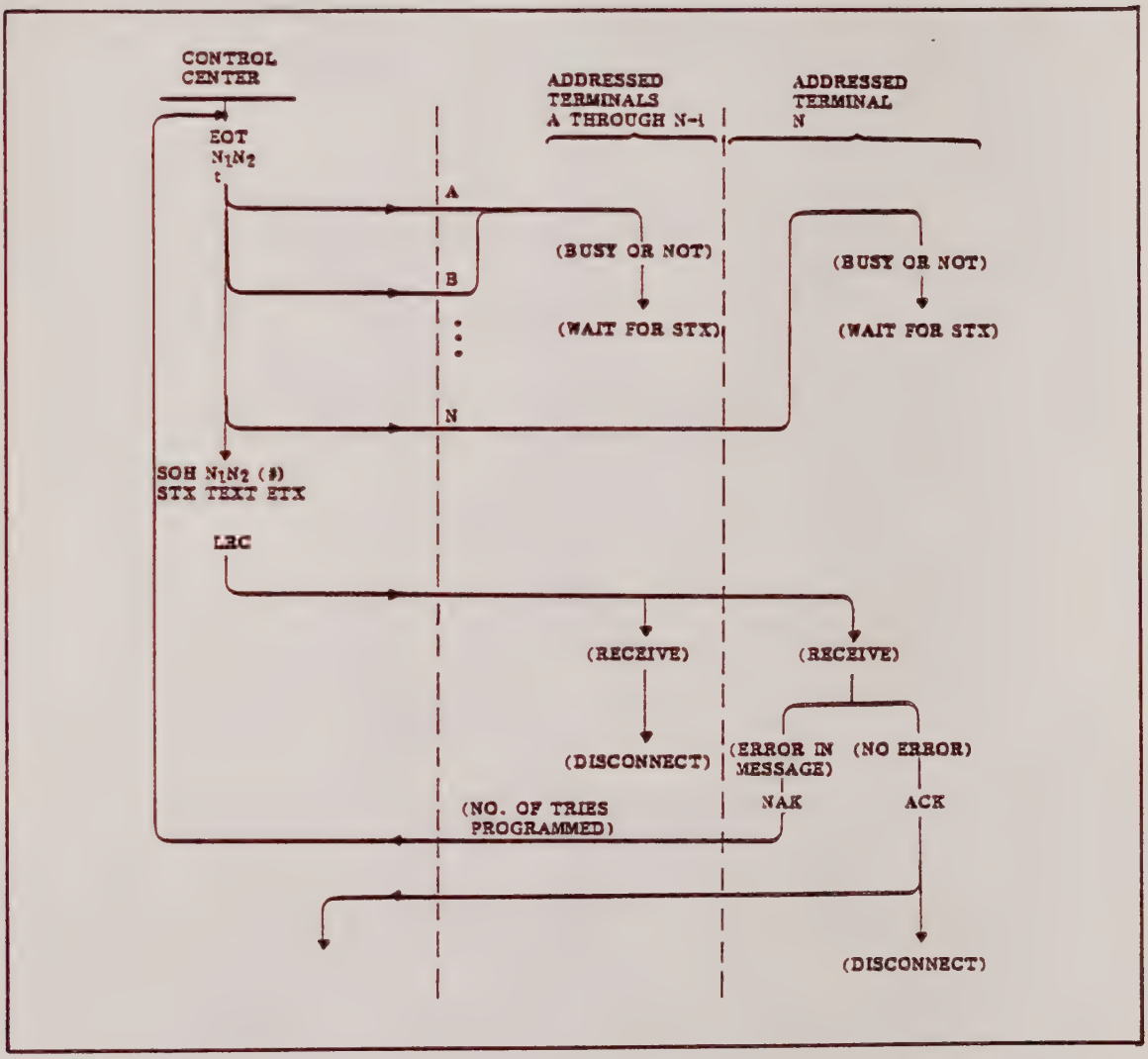

Figure C-5. BROADCAST SELECT Function Dialogue, Flow Diagram

SEND Response (See figure C-6.)

One of six characters specifies the information that the addressed terminal is to send. The function character (v,w,x, y,z, or {) is transmitted in place of the "q" in the standard header. The six possible SEND functions are as follows:

1. Send Line Foreground (v). The terminal will send all foreground unprotected data in the line in which the cursor rests from beginning of line to the cursor position. NUL characters are not transmitted.

2. Send Page Foreground (w). The terminal will send all foreground data in the page, starting at the HOME location and ending at cursor position. NUL characters are not transmitted.

3. Send Line All (x). The terminal will send all data, protected and unprotected, in the line in which the cursor rests, stopping at cursor. All characters are transmitted, with the sequence [ESC)] preceding the first character of a protected field, and the sequence [ESC (] following the last character of a protected field.

4. Send Page All (y). The terminal will send all data, protected and unprotected, in the page, beginning at the HOME location, stopping at cursor. All characters are transmitted, with the sequence [ESC)] preceding the first character of a protected field, and the sequence [ESC (] following the last character of a protected field.

5. Send Message Foreground (z). The terminal will send only unprotected data. An FS character is written at the cursor location. The cursor is then returned to the last previous FS or (unprotected) HOME. Transmission begins with the next character following HOME or the beginning of the next line following the first FS. Transmission stops at the last FS and the End Block character(s) is (are) written. The cursor moves to a new line. If AUTO PAGE is set, and transmission started on page 2, part or all of both pages could be transmitted. The final FS character is also transmitted.

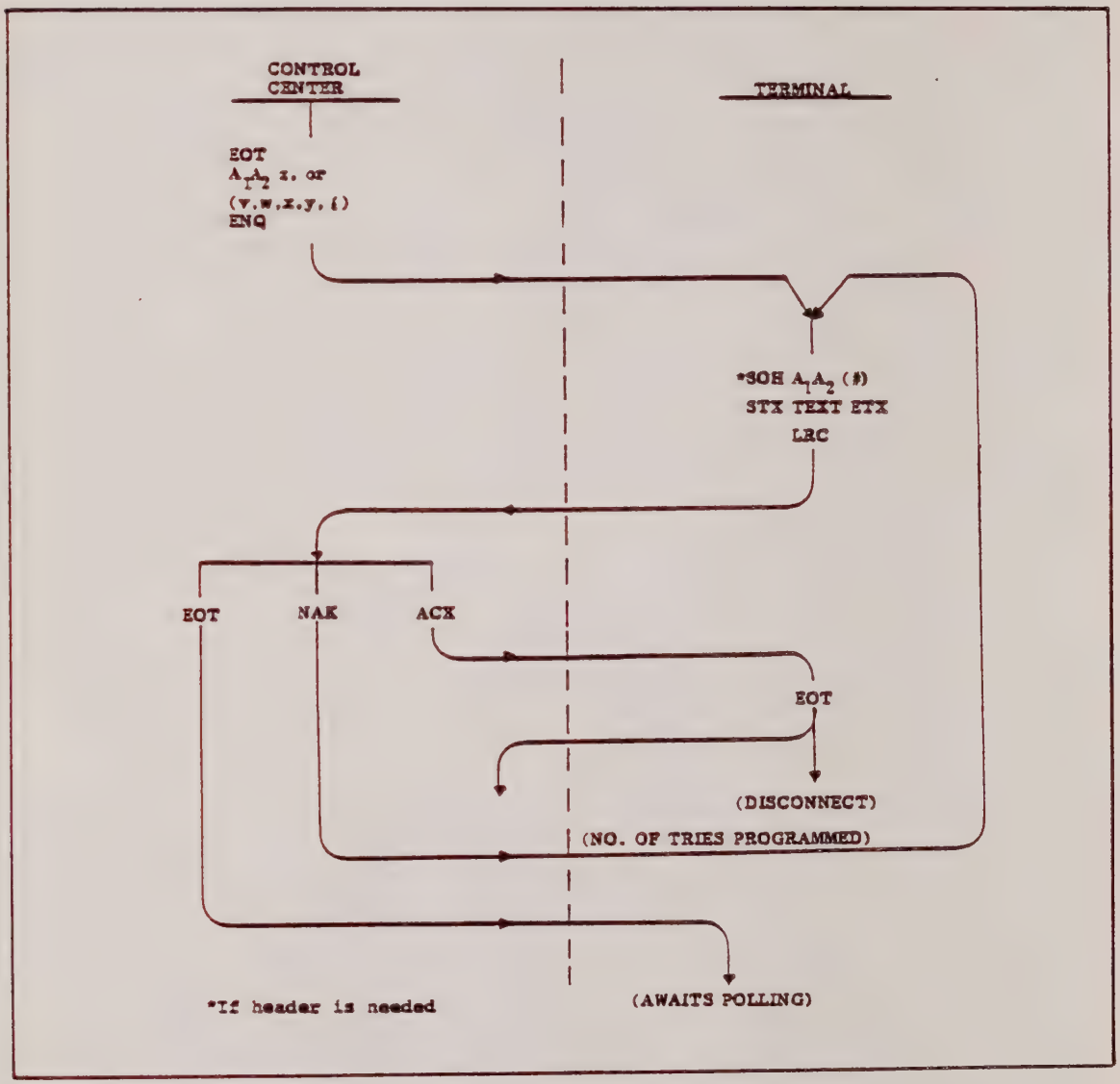

Figure C-6. SEND Function Dialogue, Flow Diagram

6. Send Message All ({). The terminal operation is the same as for Send Message Foreground (z), except that all characters are transmitted, with "ESC (" preceding the first character of a protected field and "ESC)" following the last character of a protected field.

   In standard (ADM-1 compatible) operation, control codes may be written by preceding the control code by ESC; i.e. (ESC Return) will cause the CR character to be written to the screen rather than being interpreted as a Return Operation.

C.1.6 MULTI-POINT CONTENTION Operations

MULTI-POINT CONTENTION is a polling mode which is selectable only by the control center. In this mode, the control center CPU notifies all terminals on the line that the CPU will not poll until it has a message to be sent or until a polling terminal signifies that it has a message for the CPU. The CPU sends "EOT NUL NUL BEL".

APPENDIX G

ADM-31 OPERATION

Using

129879-1 or 129870-11 Printed Circuit Board Assembly

(129870-3 or 129870-9 Printed Wiring Board)

CONTENTS

The material included in the Appendix consists of ADM-31 operation instructions applicable to the 129870-1 or 129870-11 Printed Circuit Board Assembly (129870-3 or 129870-9 Printed Wiring Board respectively), each of which is different from the instructions contained in ADM-31 Data Display Terminal Maintenance Manual dated April 1979. On those pages of the Maintenance Manual in which changes occur (excluding illustration pages), the lines containing changed data are indicated by revision bars in the outer margin of the page. To facilitate page-by-page replacement of changed pages in the basic manual, the page backing up the changed page is also provided here in.

The pages of the Maintenance Manual containing changes are located in this Appendix as follows:

APPENDIX PAGE	MAINTENANCE MANUAL PAGE	APPENDIX PAGE	MAINTENANCE MANUAL PAGE
G-4	1-2	G-19	2-5
G-5	1-3	G-20	2-6
G-6	1-4	G-21	2-7
G-7	1-7	G-22	2-8
G-9	1-12	G-23	2-9
G-10	1-11	G-24	2-10
G-11	1-13	G-25	3-17
G-12	New	G-26	3-18
G-13	1-14	G-27	3-19
G-14	1-15	G-28	3-20
G-15/16	1-16	G-30	3-26
G-17	2-3	G-32	3-36
G-18	2-4	G-33	3-45
		G-35	A-5

SECTION 1

GENERAL DESCRIPTION

1.1 INTRODUCTION

This section contains a description of the primary functions of the Lear Siegler ADM-31 Data Display Terminal (see figure 1-1), along with physical dimensions, specifications and ranges, and operating features.

1.2 PURPOSE AND USE

There are numerous applications of the ADM-31, all involving the transfer of data. Data transfer, in some applications, may be almost exclusively unidirectional; either from the ADM-31 to the computer, or from the computer to the ADM-31. A more frequent application of the ADM-31, however, is one in which an operator communicates with a computer, and the computer responds in accordance with its stored program.

The ADM-31 has the following general capabilities:

- Full 128 ASCII character set with 80 x 24 character non glare display
- 14 transmission rates and 5 transmission modes
- Data key roll-over protection
- 15-Key numeric keyboard
- 5 Separate cursor control keys
- Two full pages of memory
- Program Mode
- Special control character sequences
- Full editing, formatting, and protected fields capabilities

- Variable 10-or 11-bit word structures
- Dynamic behavior (personality) modification
- Selectable refresh rate
- Reversed, blinking, and blanked fields
- Standard RS-232-C, 20 ma current loop, and RS-232-C extended interfaces, with optional line printer, polling, and direct connect interfaces.

1.3 OPERATIONAL DESCRIPTION

The ADM-31 is a microprogram-controlled device which provides a means of communicating with a remote computer, and which allows the user full control of the content and format of data entered by means of the keyboard. Figure 1-2 illustrates the flow of data through the functional areas of the ADM-31.

The standard ADM-31 consists of a power supply, keyboard, control section (CPU), video logic and control, CRT display, configuration control switches, and external interface logic. The interface logic permits the following interfaces: standard RS-232-C, current loop, direct connect, and extended RS-232-C interfaces via the MODEM and EXTENSION ports; polling interface via the MODEM port; serial printer interface via the PRINTER port.

1.3.1 Switching Power Supply

The ADM-31 power supply is a 52-watt switching power supply mounted on a printed circuit board which is adjacent to the main printed circuit board assembly. Four regulated dc voltages are furnished for use by the CPU: +55/40 volts, +5 volts, and ±12 volts. The power supply can accept line voltage inputs of 115 Vac or 230 Vac (with 230 volt transformer and connections).

1.3.2 Keyboard

Data to be processed by the terminal is either from the keyboard or is sent from the remote computer. Keyboard entry is made using one of the 90 keys on the keyboard. Each keystroke is encoded into a parallel ASCII character which appears on seven data lines connected to the CPU. Accompanying the 7-bit character is a keystroke which alerts the program that a character is to be input from the keyboard.

1.3.3 Control Section (CPU)

The Control Section (CPU) contains the microprocessor and various integrated circuits which control all the operations of the

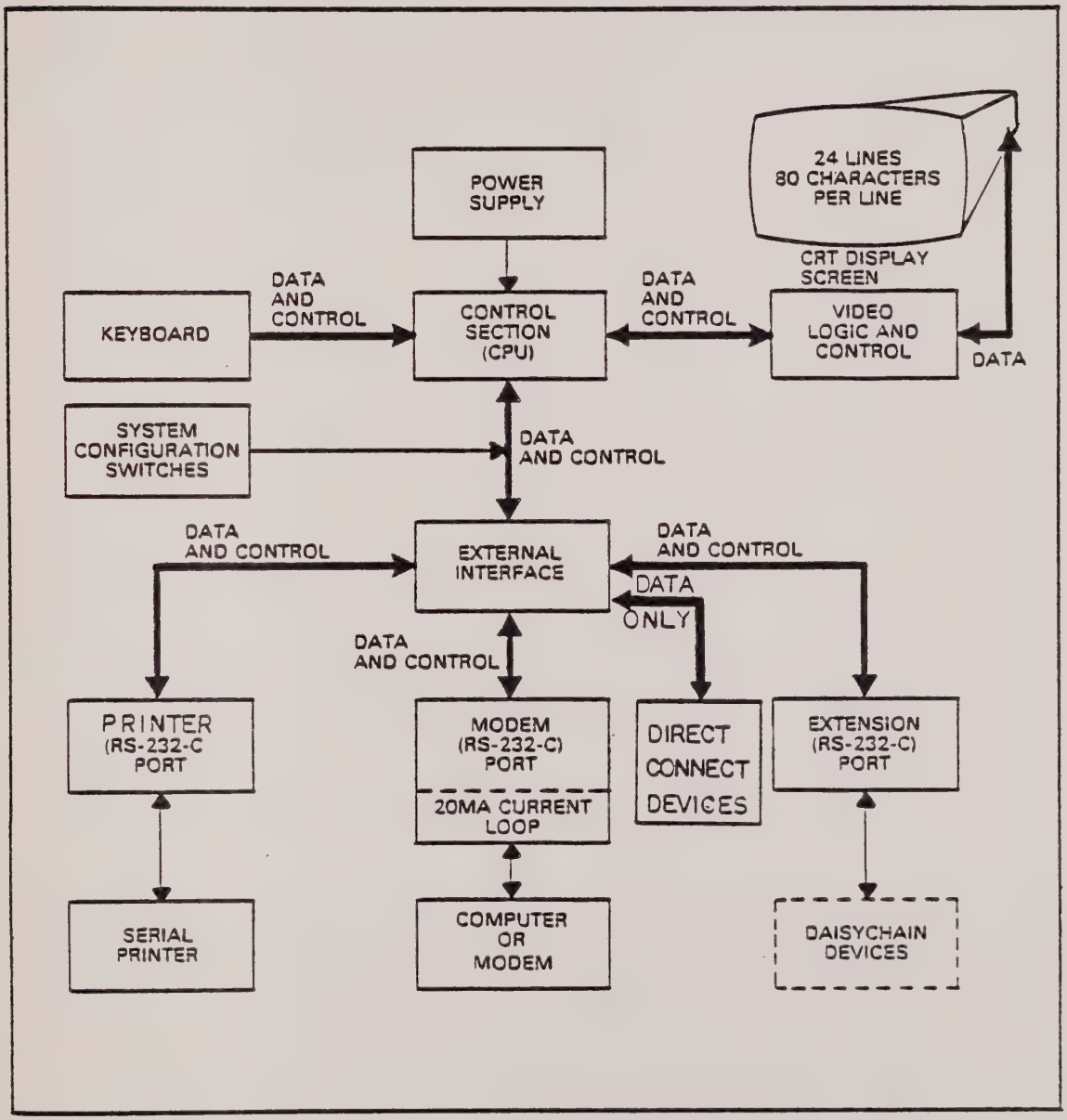

Figure 1-2. ADM-31 Data Flow Block Diagram

ADM-31. These operations include: timing and control, data handling and storage, interpreting and responding to control commands from the keyboard and the computer, video control, I/0 interfacing, and status control.

Data entered from the keyboard is placed on the Data Bus and sent to the CPU section, which contains the microprocessor and various other integrated circuits and switches. The CPU, executing a stored read only memory (ROM) program, decodes the input data and reformats it into data and control instructions for the video logic and control section.

1.3.4. Video Logic and Control

The Video Logic and Control section contains the display logic needed to drive the CRT, 4k of random access memory (RAM), and character generation circuits, as well as the video logic and 12-inch monitor. The monitor screen can display 24 lines of data containing as many as 80 characters per line. Data from the CPU is written into the video RAM; control instructions from the CPU cause the contents of the RAM to be periodically displayed on the CRT screen.

1.3.5 External Interface

Data and control information from a remote computer is routed through the MODEM port to the external interface section, and then to the CPU. The CPU causes data to be displayed on the CRT in the same manner as the keyboard data. The interface contains the logic circuitry appropriate for interfacing with RS-232-C point-to-point signals, 20-ma current loop signals, and modem logic. Optional circuits for an RS-232-C serial printer interface and for polling are also provided. The external interface also contains the baud rate clock and baud rate switches which permit the ADM-31 to receive or transmit data at selected baud rates from 50 to 9600 baud.

The ADM-31 transmits data by retrieving data from the video RAM and placing it on the Data Bus for routing to the CPU. The CPU reformats the data and routes data and control information to the external interface section over the Data Bus. External interface logic is used to prepare the data and control information for transmission to the appropriate device connected.

1.3.6 System Configuration Switches

Five banks of system configuration switches are provided to control various attributes and characteristics of the ADM-31. The switches may select only part of the information for transmission. This

is done by inserting control characters in the copy during the editing phase. These control characters signal the start of message and the end of message. Then when the SEND PAGE or SEND MESSAGE COMMAND is issued, only the copy between the control characters is transmitted.

The Block Mode, besides providing the edit capability, also permits faster transmission of large blocks of data than can be obtained in the Conversation Mode. It also permits more efficient utilization of the remote computer and data transmission lines. The ADM-31 can operate off-line when the information is being typed and edited, and come on-line only during the actual transmission. Then too, the baud rate can be increased, which results in a reduction of computer time (to receive the information), as compared to having the operator send the same message in the Conversation Mode.

Conversation Mode, Half-Duplex

In this mode, the ADM-31 can send and receive information to and from the remote computer, but in only one direction at a time. Characters are displayed, and simultaneously transmitted, one character-at-a-time as they are typed at the keyboard. Received characters are displayed as they are received.

Conversation Mode, Full-Duplex

The ADM-31 can transmit and receive information in both directions simultaneously in full-duplex operation. Characters are transmitted as they are typed, but are displayed only on reception. In order for transmitted characters to be displayed in full-duplex operation, they must be echoed from the remote computer back to the ADM-31.

1.5.2 Character Format

The standard ADM-31 character set contains 128 ASCII characters, 32 of which are control characters that require two-key special function sequences to produce from the keyboard. (See figure 1-3.) The entire character set can be displayed on the CRT screen if transmission from computer or keyboard is preceded by an escape sequence (ESC U) placing the teminal in Program Mode.

1.5.3 Word Structure

The ADM-31 can transmit and receive data characters in any one of the asynchronous character formats shown in figure 1-4. These word formats are selected by means of DIP switches located internal to the ADM-31.

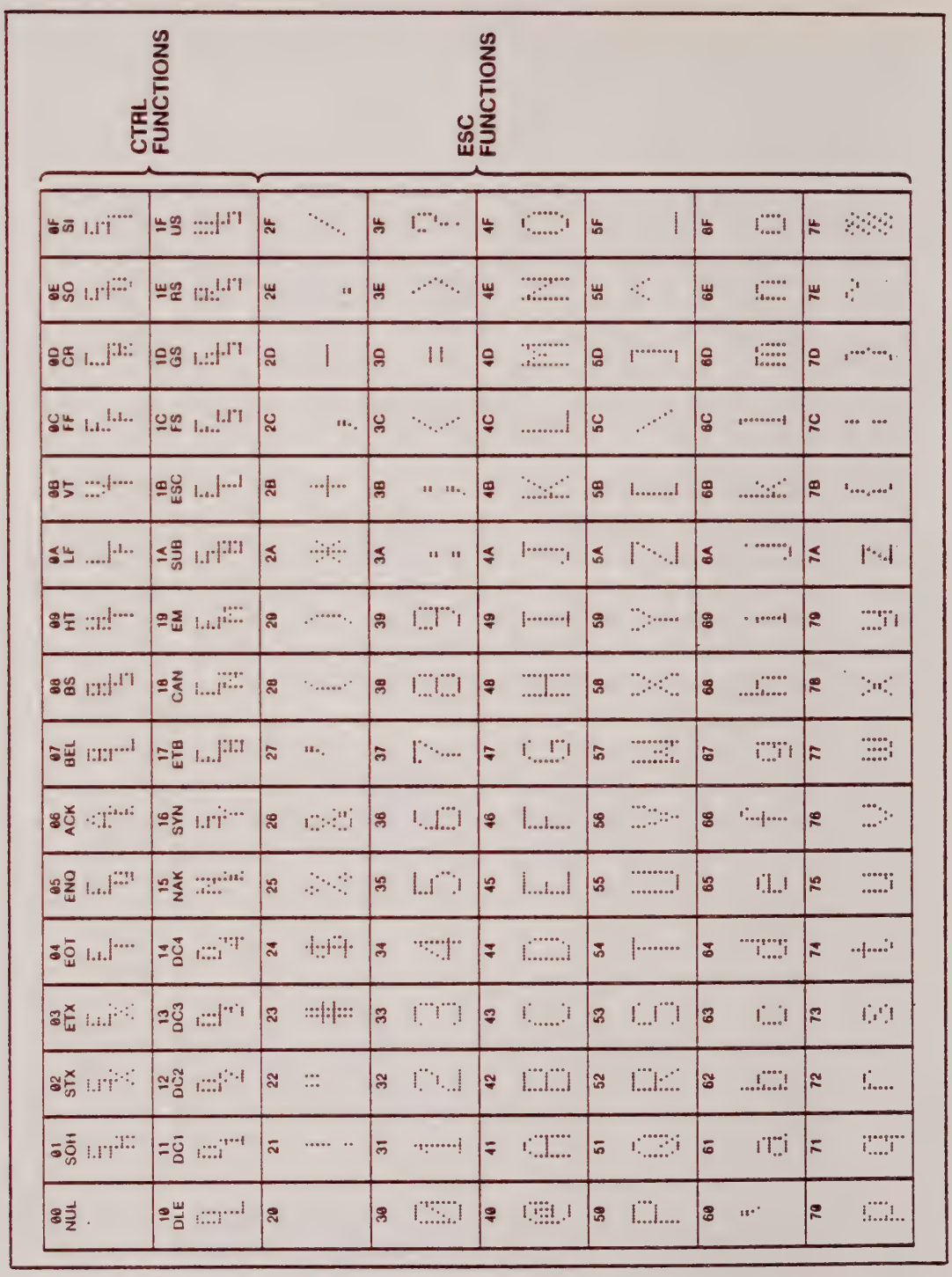

Figure 1-3. ADM-31 Character Format (By Ascending ASCII Codes) With HEX Code

WORD FORMAT	DIP SWITCH CONFIGURATIONS				WORD STRUCTURE									
	SW5	SW4	SW3	BIT Ø	BIT 1	BIT 2	BIT 3	BIT 4	BIT 5	BIT 6	BIT 7	BIT 8	BIT 9	BIT 1Ø
Eleven-Bit Word with Even Parity and 2 STOP Bits	ON	ON	ON	$S_{t_{a_{r_t}}}$	ACTIVE BITS = 1 OR Ø							even parity	stop	stop
Eleven-Bit Word with Odd Parity and 2 STOP Bits	ON	ON	OFF	$S_{t_{a_{r_t}}}$	ACTIVE BITS = 1 OR Ø							odd parity	stop	stop
Ten-Bit Word with Even Parity and 1 STOP Bit	ON	OFF	ON	$S_{t_{a_{r_t}}}$	ACTIVE BITS = 1 OR Ø							even parity	stop	X
Ten-Bit Word with Odd Parity and 2 STOP Bits	ON	OFF	OFF	$S_{t_{a_{r_t}}}$	ACTIVE BITS = 1 OR Ø							odd parity	stop	X
Eleven-Bit Word with No Parity and 2 STOP Bits	OFF	ON	ON	$S_{t_{a_{r_t}}}$	ACTIVE BITS = 1 OR Ø							always Ø	stop	stop
Ten-Bit Word with No Parity and 1 STOP Bit	OFF	ON	OFF	$S_{t_{a_{r_t}}}$	ACTIVE BITS = 1 OR Ø							always Ø	stop	X
Eleven-Bit Word with Even Parity and 1 STOP Bit	OFF	OFF	ON	$S_{t_{a_{r_t}}}$	ACTIVE BITS = 1 OR Ø							always 0	even parity	stop
Eleven-Bit Word with Odd Parity and 1 STOP BIT	OFF	OFF	OFF	$S_{t_{a_{r_t}}}$	ACTIVE BITS = 1 OR Ø							always 0	odd parity	stop

Figure 1-4. Word Format Codes With DIP Switch Configurations

1.5.4 Configuration Control

Five sets (banks) of DIP switches are provided on the main PCBA, which can be used to establish or change certain operational characteristics of the ADM-31. Figure 1-5 and 1-6 show the location and function of the Switch Banks on PWB 129870-3 and PWB 129870-9, respectively.

Switch Location A13

Switch Location A13 has eight active DIP switches, which operate as shown in the following chart:

SWITCH LOCATION A13 SWITCHES			OPERATION	
			PWB 129870-3	PWB 129870-9
SW1	SW2	SW3		
OFF	OFF	OFF	No BUSY signal (May be used at low baud rates)	No BUSY signal; DCD DSA
OFF	OFF	ON	No BUSY signal (May be used at low baud rates)	No BUSY signal; DCD ENA
OFF	ON	OFF	BUSY active HIGH on pin J5-20	BUSY on pin J5-20; DCD disabled
OFF	ON	ON	BUSY active LOW on pin J5-20	Not allowed
ON	OFF	OFF	BUSY active HIGH on pin J5-19	BUSY on pin J5-19; DCD disabled
ON	OFF	ON	BUSY active LOW on pin J5-19	BUSY on pin J5-19; DCD enabled
All other SW1, SW2, SW3 combinations not allowed				
SW4	SW5			
OFF	OFF		Current Loop and Secondary Channel Disabled	
ON	OFF		Current Loop ENA; Secondary Channel DSA	
OFF	ON		Secondary Channel ENA; Current Loop DSA	
ON	ON		Current Loop and Secondary Channel ENA	
SW6			ON causes NULLS to be displayed as spaces OFF causes NULLS to be displayed as NULLS	ON enables printer BUSY active LOW; OFF enables printer BUSY active HIGH.
SW7			ON causes cursor to remain steady; OFF causes cursor to blink.	
SW8			ON causes selected personality attribute character to be displayed; OFF causes space to be displayed instead of character.	

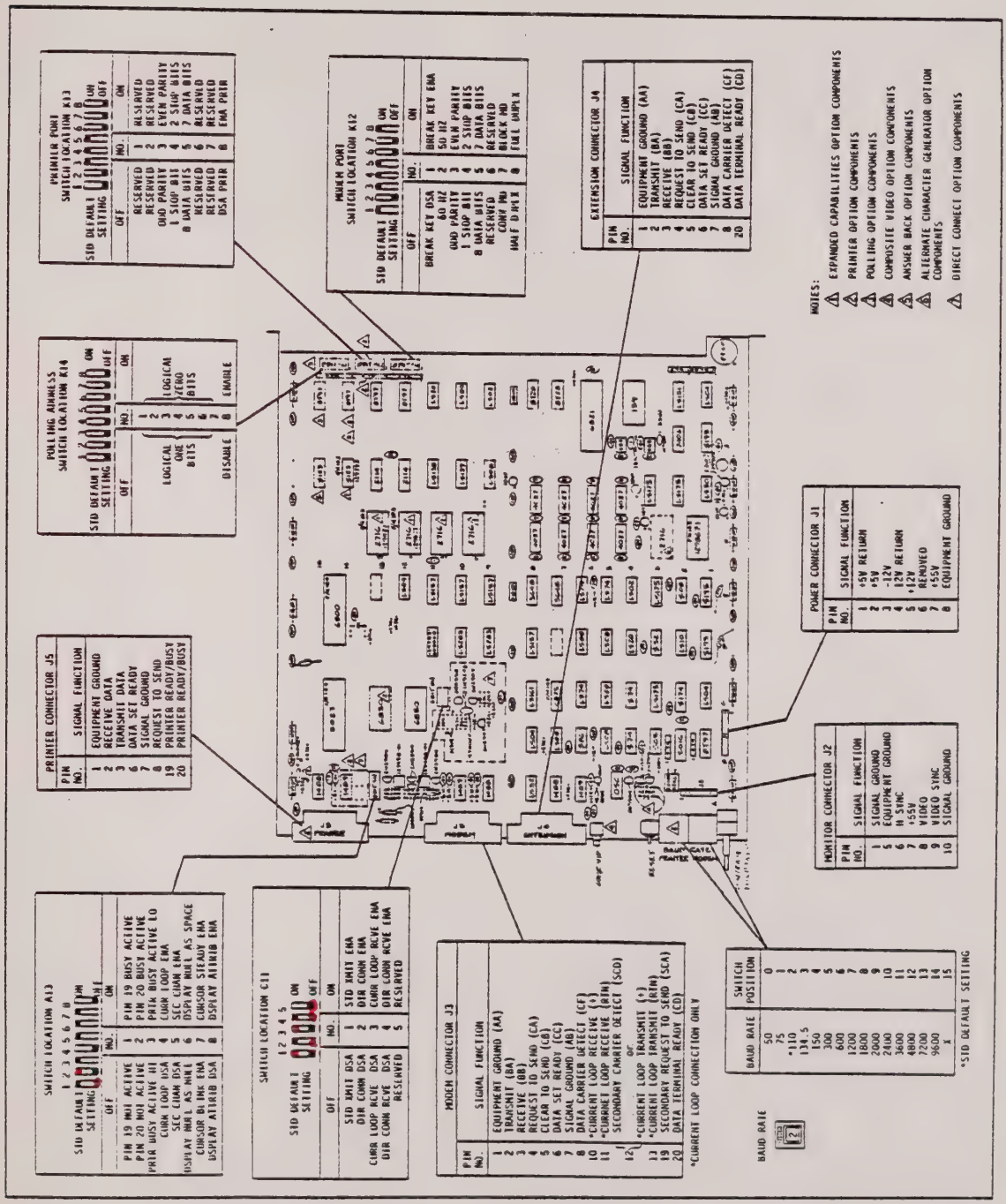

Figure 1-5. Optional Features and Component Locations on PWB 129870-3

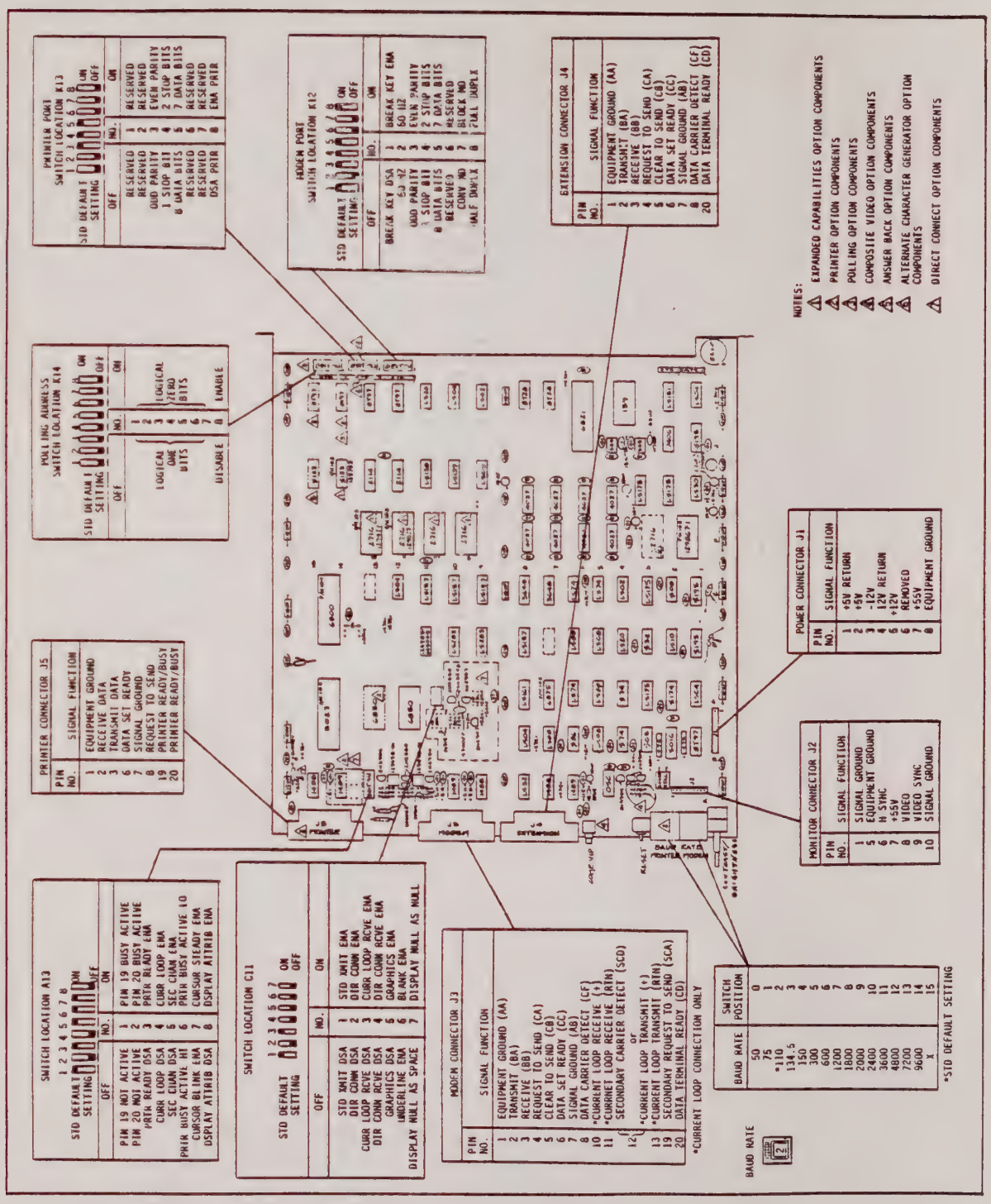

Figure 1-6. Optional Features and Component Locations on PWB 129870-9

Switch Location C11

Switch Location C11 has four active switches on PWB 129870-3 and seven active switches on PWB 129870-9, as shown on the following chart:

SWITCH LOCATION C11 SWITCHES				OPERATION	
				PWB 129870-3	PWB 129870-9
SW1	SW2	SW3	SW4		
ON	OFF	OFF	OFF	Standard RS-232C. Current Loop and Direct Connect functions disabled	
ON	OFF	ON	OFF	Standard RS-232C and Current Loop functions enabled; Direct Connect disabled	
OFF	ON	OFF	ON	Direct Connect function enabled; Standard RS-232C and Current Loop disabled	
ALL OTHER CONFIGURATIONS				Not Allowed	
SW5				Reserved	ON enables graphics stretch function for graphics mode; OFF disables function
SW6				N/A	OFF enables underline function; ON enables blanking function
SW7				N/A	OFF causes NULLS to be displayed as spaces; ON causes NULLS to be displayed as NULLS

Switch Location K12

Switch Location K12 has seven active DIP switches which operate as described below.

- SW1 controls the operation of the keyboard BREAK key: OFF disables the key; ON enables the key
- SW2 controls the monitor refresh rate: OFF for 60 Hz line frequency; ON for 50 Hz frequency
- SW3, 4, 5 control the MODEM interface word structure, in accordance with the settings shown in figure 1-4
- SW7 controls the basic ADM-31 transmission mode: OFF for Conversation Mode; ON for Block Mode. The transmission mode may be dynamically changed by an escape sequence.
- SW8 OFF establishes Conversation Mode Half Duplex operation; ON establishes Conversation Mode Full Duplex operation. Half or Full Duplex operation may be dynamically selected by an escape sequence.

Switch Location K13

Switch Location K13 has four active DIP switches which operate as described below.

- SW3, 4, 5 control the PRINTER interface port word structure in accordance with the settings shown in figure 1-4.
- SW8 ON enables the printer buffer to receive data which is to be transmitted to the (optional) printer via the PRINTER port. SW8 OFF disables the printer buffer.

Switch Location K14

Switch Location K14 has eight active DIP switches which control the Polling Option, as follows:

- SW1 thru SW7 control the terminal's polling address: OFF = logical 1; ON = logical 0.
- SW8 OFF disables and SW8 ON enables the Polling Option.

1.6 OPTIONAL FEATURES

The following options are available for use on the ADM-31.

1.6.1 Option 129543-2 - Printer

The Printer Option provides the interface, switching, and control logic components required to connect and operate an asynchronous serial printer. Included in this option is the ability to program the printer buffer so that the printer connected to the PRINTER port may be controlled directly from the host computer without otherwise affecting ADM-31 operation.

1.6.2 Option 129543-3 - Polling

The Polling Option provides the appropriate interface, switching, and control logic components to accommodate the following polling modes: Standard Poll, Select, Sequential Select, Fast Select, and Broadcast Select.

1.6.3 Option 129543-4 - Composite Video

The Composite Video Option converts the CRT's video and sync signals into a composite video output which is then routed to the rear-panel COMPOSITE VIDEO output connector. Data can then be transmitted to a compatible composite video monitor located up to 1000 feet away, through a single coaxial cable. The ADM-31 can function in its normal capacity at the same time it is serving as a control terminal for a remote monitor.

NOTE: Horizontal Sync = 19.2 KHz

1.6.4 Option 129543-5 - Answer Back

The automatic Answer Back Option operates in a polling environment to provide terminal identification and allow the ADM-31 to respond to an ENQ input from the computer with the answer back message. The answer back message will be displayed as it is being transmitted, if the terminal is in Conversation Mode, Half Duplex.

1.6.5 Option 129543-6 - Alternate Character Generator Set

This option makes it possible to display and print data in many different fonts and languages.

1.6.6 Option 129543-7 - Direct Connect Interface

This option provides the necessary circuitry to convert RS-232C signal levels to those required to interface with Burroughs-type computer systems (i.e. polling systems which are operated in Half Duplex Mode only). Up to nine terminals may be operated on the same twisted pair lines.

1.7 RELATED DOCUMENT

ADM-31 Maintenance Manual DP310

functions and standard default settings are also shown in figures 1-5 and 1-6. The switches can be reached by opening the ADM-31 cover, as follows:

1. Remove the two slot-head screws located under the front corners of the terminal base.

2. Lift the cover upwards and rearwards from the front until it rests on the table or desk.

2.6 INTERFACE INFORMATION

The ADM-31 may be cabled directly to a local computer, serial printer, or other auxiliary device, or it may be connected via telephone data lines to a remote computer located anywhere in the world. Remote computer connections require the use of a modem or data set. Figure 2-1 shows several typical ADM-31 interfaces, while Figure 2-2 shows the ADM-31 interface logic associated with the interfaces.

2.6.1 RS-232C MODEM Port Interface

The MODEM port interface is used to connect the terminal directly to a computer, modem or data set, or to a computer or device in a current-loop, polling, or direct connect application. Table 2-2 lists the connector pin vs. signal functions for this interface.

2.6.2 RS-232C PRINTER Port Interface

The PRINTER port interface is used for connecting between the terminal and a serial printer. Refer to table 2-2 for the serial printer interface data.

2.6.3 RS-232C EXTENSION Port Interface

The EXTENSION port interface enhances the standard RS-232C capabilities of the ADM-31 to permit daisychaining of several terminsl or other auxiliary devices. Table 2-2 provides interface data associated with this port.

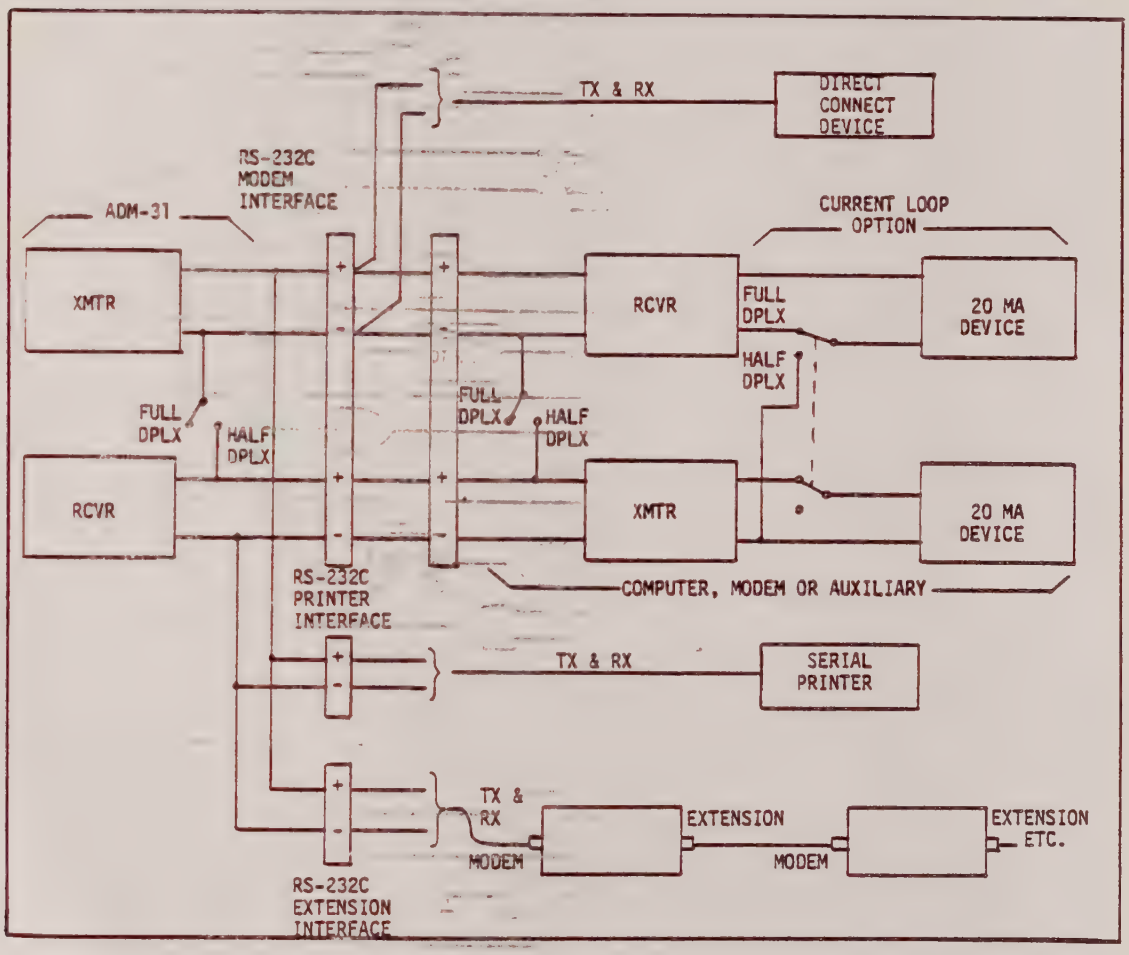

Figure 2-1. Typical ADM-31 Interfaces

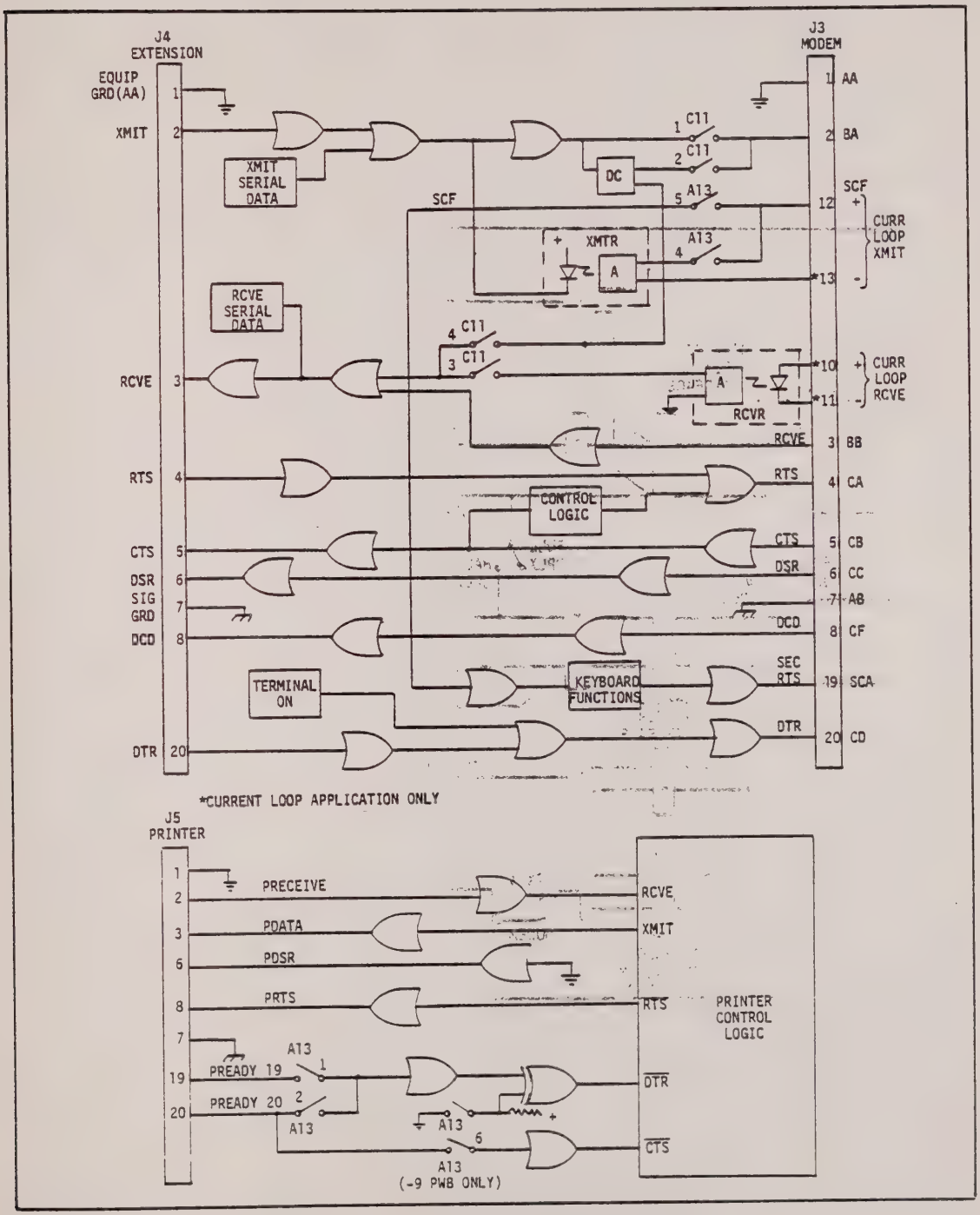

Figure 2-2. ADM-31 Interface Logic

Table 2-1. Configuration Control Switch Settings

(Deleted)

Tabel 2-1. Configuration Control Switch Settings (cont'd)

(Deleted)

Table 2-2. Data Interface Connector Pin/Signal List

CONNECTOR	PIN No.	SIGNAL FUNCTIONS	TTY CODE
MODEM J3	1	Equipment Ground (GND)	AA
	2	Transmit Data (XMIT)	BA
	3	Receive Data (RCV)	BB
	4	Request to Send (RTS)	CA
	5	Clear to Send (CTS)	CD
	6	Data Set Ready (DSR)	CC
	7	Signal Ground (GND)	AB
	8	Carrier Detect (DCD)	CF
	10	*Current Loop Receive (+)	
	11	*Current Loop Receive (RTN)	
	12	Secondary Carrier Detect (SCF)	SCF
	13	*Current Loop Transmit (RTN)	
	19	Secondary Ready to Send (SCA)	SCA
	20	Data Terminal Ready (DTR)	CD
PRINTER J5	1	Equipment Ground (GND)	
	2	Receive Data (RCV)	
	3	Transmit Data (XMIT)	
	6	Data Set Ready (DSR)	
	7	Signal Ground (GND)	
	8	Request to Send (RTS)	
	19	Clear to Send (CTS)	
	20	Data Terminal Ready (DTR)	

*Current Loop application only.

Table 2-2. Data Interface Connector Pin/Signal List (cont'd)

CONNECTOR	PIN NO.	SIGNAL FUNCTION	TTY CODE
EXTENSION J4	1	Equipment Ground (GND)	AA
	2	Receive Data (RCV)	BB
	3	Transmit Data (XMIT)	BA
	6	Data Set Ready (DSR)	CC
	7	Signal Ground (GND)	AB
	8	Request to Send ($\overline{\text{RTS}}$)	CA
	19	Clear to Send ($\overline{\text{CTS}}$)	CB
	20	Data Terminal Ready ($\overline{\text{DTR}}$)	CD

2.7 INSTALLING THE ADM-31

CAUTION

Be sure the bubble packing has been removed from the interior of the electronic unit. Damage to the equipment may result if not removed.

To install the ADM-31, proceed as follows:

1. Connect the data interface cable to the terminal using the appropriate information from table 2-2.

2. Check the ON/OFF switch to ensure it is in the OFF position.

3. Plug the terminal into a grounded AC outlet of the proper voltage.

4. Set the appropriate BAUD RATE switch (see figure 1-5 or 1-6) to the desired baud rate.

5. Set the configuration control switches (see figure 1-5 or 1-6) to the positions desired to control the terminal characteristics.

6. Proceed to turn on the terminal (refer to Section 3).

2.8 CARE OF THE ADM-31 TERMINAL DISPLAY

This portion of the manual provides the required operator instructions pertaining to routine maintenance for the ADM-31 Data Terminal Display. Preventive maintenance procedures are limited primarily to cleaning and inspection steps.

2.8.1 Cleaning

At periodic intervals, clean the exterior housing and lightly dust the unit using a soft brush or damp lint-free cloth. However, paper towels may be substituted if desired. Remove smudges from the CRT exterior screen and the housing with conventional spray cleaners or alcohol. Do not use petroleum base cleaners, such as lighter fluid, as this could be harmful to the painted surface. Be careful not to scratch the CRT screen, and do not use freon cleaners.

2.8.2 Inspection

Periodically, inspect switches and keyboard assembly for freedom of movement. Determine that the intensity of character trace on the CRT screen has not diminished. Any required mechanical and electrical adjustment shall only be performed by an authorized Lear Siegler service representative.

from the computer is buffered to make it available for editing and additions from the terminal prior to printing. In addition, the printer can be operated at any one of the transmission baud rates listed in paragraph 3.5.1. The Print Mode can be initiated from the keyboard using the PRINT key, or CTRL/PRINT keys. The Print Mode can also be entered by means of an escape sequence initiated from the keyboard or the remote computer. Using the PRINT key or the CTRL/PRINT keys, data can be sent to the printer in page format. A Free Form Mode is available via an "ESC L" sequence. An additional buffered Print Mode is available via an "ESC A" sequence.

In either the page format or free form mode, data is transmitted continuously as long as the printer and the terminal are ready. These conditions are monitored to provide printer/terminal control in the following manner (see figure 2-2):

1. The serial printer interface is enabled by setting SW8 of Switch Location K13 (see figure 1-5 or 1-6) to the ON position, thus enabling PRINTER port receive buffer.
2. When the terminal is ready to transmit data, REQUEST TO SEND (RTS) is sent to the printer.
3. If the printer is ready, it signals PREADY, which alerts the terminal. Depending upon which printer is selected, PREADY may be applied to pin 19 or 20 of connector J5. PREADY may also be active high or active low. SW1, SW2, and SW3 of Switch Location A13 are provided to accommodate the various printers which may be connected, and should be positioned in accordance with the following chart.

NOTE: BUSY = PRINTER NOT READY

SWITCH LOCATION A13 SWITCHES			OPERATION	
			PWB 129870-3	PWB 129870-9
SW1	SW2	SW3		
OFF	OFF	OFF	No BUSY signal (May be used at low baud rates)	No BUSY signal; DCD DSA
OFF	OFF	ON	No BUSY signal (May be used at low baud rates)	No BUSY signal; DCD ENA
OFF	ON	OFF	BUSY active HIGH on pin J-5-20	BUSY on pin J-5-20; DCD disabled
OFF	ON	ON	BUSY active LOW on pin J-5-20	Not allowed
ON	OFF	OFF	BUSY active HIGH on pin J5-19	BUSY on pin J5-19; DCD disabled
ON	OFF	ON	BUSY active LOW pin J-5-19	BUSY on pin J5-19; DCD enabled
All other SW1, SW2, SW3 combinations not allowed				

Print Format Mode allows data to be printed exactly as displayed on the CRT screen. Transmission is initiated by pressing the PRINT key or CTRL/PRINT keys as the desired print operation

stopping position. (Print Format Mode can also be entered via a keyboard-initiated or computer-initiated "ESC P" sequence). The following takes place:

1. The control character GS is written at the cursor position as a STOP code.
2. The cursor is moved to the HOME position.
3. The code sequence CR LF NULL is sent to the printer, followed by the data displayed on the screen.
4. NULL characters and trailing spaces on a line are not sent. When the last character on each line is sent, the terminal send the CR LF NULL sequence before moving to the next line.
5. Upon reaching the STOP code, the operation is terminated, a final CR LF NULL is sent, and the STOP code (GS) is overwritten with a space.

Note

A STOP code within the text will cause the printing to stop at that point.

6. Breaks in the transmission may occur to allow for mechanical printer operations or other delays, by means of the printer READY logic described above. If the printer goes BUSY upon receipt of a control character (CR, LF, etc.) that character should be followed by one or two RUB out characters to ensure that no data will be lost. The keyboard BREAK key may also be used to interrupt transmission for as long as the key is held depressed.

Free Form Format Mode transmits a continuous stream of data without inserting control characters and without internal ADM-31 delays. This mode allows greater flexibility in formatting the printed copy, especially with printers having other than 80-character lines. Transmission is initiated via keyboard-initiated or computer-initiated "ESC L" sequence. The following operations take place:

1. The control character GS is written at the cursor position as a STOP code.
2. The cursor is moved to the HOME position and transmission begins.
3. Line control characters (CR, LF, etc.) are not inserted at the end of each ADM-31 display line; transmission continues without delay from line to line, until STOP code (GS) is reached. STOP code is overwritten.
4. NULL characters on the screen are sent to the printer, and all trailing spaces are transmitted.

5. Control codes for print formatting may be embedded in text using local or remote escape, CTRL, or FUNCTION sequences, but only while the terminal is in Program Mode. Such control codes include: CR, LF, FF, VT, BEL, ESC, BS, FS, GS, RS, and US.

6. Breaks in the transmission may occur to allow for mechanical printer functions or other delays, by means of the printer BUSY logic described above. If the printer goes BUSY upon receipt of a control character (CR, LF, etc.) that character should be followed by one or two RUB out characters to ensure that no data will be lost. The keyboard BREAK key may also be used to interrupt transmission for as long as the key is held depressed.

3.5.7 Buffered Print Mode Transmission (refer to Programming Considerations)

3.5.8 Polling Mode Transmission (Refer to Appendix C)

3.6 PROGRAM MODE

Program Mode is a mode of operating the terminal typically used for establishing non-standard text formats for transmission. In Program Mode, characters are written in memory (and displayed) in a continuous stream, without internal delays. Control characters (CR, LF, FS, etc.) are written as they are keyed, and the appropriate symbols are displayed. For example, CR, LF, and FS would be displayed: C_R L_F F_S. Program Mode may be initiated from the keyboard by using ESC U, and terminated by ESC X or ESC u. Program Mode may also be initiated and terminated by the remote computer using the ESC U and ESC X (ESC u) ASCII codes.

3.7 PROTECTED FIELDS/CHARACTERS

Areas on the ADM-31 display may be designated by the operator or by the computer as protected fields. These fields appear at reduced intensity and have the following characteristics:

1. Protected fields cannot be typed over as long as the terminal is operating in the Protect Mode.

2. Forms appearing on the display initiated by the computer are usually in protected characters.

3. Protected fields cannot be overwritten by the remote computer unless the ADM-31 is first removed from the Protect Mode.

stopping position. (Print Format Mode can also be entered via a keyboard-initiated or computer-initiated "ESC P" sequence). The following takes place:

1. The control character GS is written at the cursor position as a STOP code.
2. The cursor is moved to the HOME position.
3. The code sequence CR LF NULL is sent to the printer, followed by the data displayed on the screen.
4. NULL characters and trailing spaces on a line are not sent. When the last character on each line is sent, the terminal send the CR LF NULL sequence before moving to the next line.
5. Upon reaching the STOP code, the operation is terminated, a final CR LF NULL is sent, and the STOP code (GS) is overwritten with a space.

Note

A STOP code within the text will cause the printing to stop at that point.

6. Breaks in the transmission may occur to allow for mechanical printer operations or other delays, by means of the printer READY logic described above. If the printer goes BUSY upon receipt of a control character (CR, LF, etc.) that character should be followed by one or two RUB out characters to ensure that no data will be lost. The keyboard BREAK key may also be used to interrupt transmission for as long as the key is held depressed.

Free Form Format Mode transmits a continuous stream of data without inserting control characters and without internal ADM-31 delays. This mode allows greater flexibility in formatting the printed copy, especially with printers having other than 80-character lines. Transmission is initiated via keyboard-initiated or computer-initiated "ESC L" sequence. The following operations take place:

1. The control character GS is written at the cursor position as a STOP code.
2. The cursor is moved to the HOME position and transmission begins.
3. Line control characters (CR, LF, etc.) are not inserted at the end of each ADM-31 display line; transmission continues without delay from line to line, until STOP code (GS) is reached. STOP code is overwritten.
4. NULL characters on the screen are sent to the printer, and all trailing spaces are transmitted.

5. Control codes for print formatting may be embedded in text using local or remote escape, CTRL, or FUNCTION sequences, but only while the terminal is in Program Mode. Such control codes include: CR, LF, FF, VT, BEL, ESC, BS, FS, GS, RS, and US.

6. Breaks in the transmission may occur to allow for mechanical printer functions or other delays, by means of the printer BUSY logic described above. If the printer goes BUSY upon receipt of a control character (CR, LF, etc.) that character should be followed by one or two RUB out characters to ensure that no data will be lost. The keyboard BREAK key may also be used to interrupt transmission for as long as the key is held depressed.

3.5.7 Buffered Print Mode Transmission (refer to Programming Considerations)

3.5.8 Polling Mode Transmission (Refer to Appendix C)

3.6 PROGRAM MODE

Program Mode is a mode of operating the terminal typically used for establishing non-standard text formats for transmission. In Program Mode, characters are written in memory (and displayed) in a continuous stream, without internal delays. Control characters (CR, LF, FS, etc.) are written as they are keyed, and the appropriate symbols are displayed. For example, CR, LF, and FS would be displayed: C_R L_F F_S. Program Mode may be initiated from the keyboard by using ESC U, and terminated by ESC X or ESC u. Program Mode may also be initiated and terminated by the remote computer using the ESC U and ESC X (ESC u) ASCII codes.

3.7 PROTECTED FIELDS/CHARACTERS

Areas on the ADM-31 display may be designated by the operator or by the computer as protected fields. These fields appear at reduced intensity and have the following characteristics:

1. Protected fields cannot be typed over as long as the terminal is operating in the Protect Mode.

2. Forms appearing on the display initiated by the computer are usually in protected characters.

3. Protected fields cannot be overwritten by the remote computer unless the ADM-31 is first removed from the Protect Mode.

3.7.1 Designated Protected Fields

The operator has complete control over any character that he types on the CRT screen. Consequently, he may elect at any time to protect or to leave unprotected any character (or field of characters) that he, and not the computer, originates. To type protected characters, it is necessary to be in the Write Protect Mode of operation. This mode is entered from the keyboard by keying "ESC"), and terminated by keying "ESC (". Characters typed while in this mode may then be protected during operation by establishing a Protect Mode condition. From the keyboard, enter "ESC &" to set Protect Mode, and "ESC'" to terminate Protect Mode. Write Protect and Protect Mode may be initiated or terminated by the remote computer by performing the same escape sequences referred to above. (Refer to Programming Considerations for details.)

3.7.2 Selected Protected Field

The (`) character may be used to establish a special protected field in which characters which have been written protected will be transmitted along with unprotected characters in a message. While operating in Write Protect Mode a (`) character will establish the field and another (`) character will terminate the field. Any characters bracketed by the (`) character will thus be transmitted as though unprotected during a SEND LINE, SEND PAGE, or SEND MESSAGE routine, except that the bracketed field will not be erased after being sent.

The following is an example of this special operation:

1. Assume that the terminal is in Write Protect Mode.

2. The operator enters a combination of protected (P) characters, specially protected (p) characters, and unprotected (U) characters, as follows:

   PPP ` ppp UU ppp` PPP UU

3. The terminal is then placed in Protect Mode to protect the entire field.

4. If SEND LINE, SEND PAGE, or SEND MESSAGE is commanded, the following will be transmitted; only the final "UU" characters will be erased.

   ppp UU ppp UU

The special protected field is cleared along with and in the same manner as any other protected field.

HEX			FUNCTION	GRAPHIC CHARACTER SET					
			0	1	2	3	4	5	6	7
	4321	765	000	001			100	101		
0	0000		NUL	DLE			@	P		
1	0001		SOH	DC1			A	Q		
2	0010		STX	DC2			B	R		
3	0011		ETX	DC3			C	S		
4	0100		EOT	DC4			D	T		
5	0101		ENQ	NAK			E	U		
6	0110		ACK	SYN			F	V		
7	0111		BEEP	ETB			G	W		
8	1000		(←) BS	CAN			H	X		
9	1001		(SKIP) HT	EM			I	Y		
A	1010		LF(↓)	SUB			J	Z		
B	1011		VT(↑)	ESC			K	[		
C	1100		FF(→)	FS			L	\		
D	1101		CR	GS			M	]		
E	1110		SO	(HOME) RS			N	^		
F	1111		SI	(NEW LINE) US			O	_		

Figure 3-3. Chart of CTRL Key Sequence Characters, With HEX Coding

Table 3-4. Special Control Operations

CONTROL	PARA. REF.	OPERATION
1. CTRL or SHIFT/CTRL Operations:	3.10.1	
KEYS DISPLAY		ASCII CODE (OPERATION)
CTRL @ space ( )		NULL (No Op)
CTRL a/A S_H		SOH (Start of Heading)
CTRL b/B S_X		STX (Start of Text)
CTRL c/C E_X		ETX (End of Text)
CTRL d/D E_T		EOT (End of Transmission)
CTRL e/E E_Q		ENQ (Answer Back Mode)
CTRL f/F A_K		ACK (Acknowledge)
CTRL g/G B_L		BEL (Audible Alarm)
CTRL h/H B_S		BS (Back Space)
CTRL i/I H_T		HT (Horizontal Tab)
CTRL j/J L_F		LF (Line Feed)
CTRL k/K V_T		VT (Vertical Tab)
CTRL l/L F_F		FF (Forespace)
CTRL m/M C_R		CR (Carriage Return)
CTRL n/N S_O		SO (Shift Out)
CTRL o/O S_I		SI (Shift In)
CTRL p/P D_L		DLE (Data Link Escape)
CTRL q/Q D_1		DC1 (Device Control 1)
CTRL r/R D_2		DC2 (Device Control 2)
CTRL s/S D_3		DC3 (Device Control 3)
CTRL t/T D_4		DC4 (Turns Printer buffer off-line; Printer continues printing until buffer is empty.)
CTRL u/U N_K		NAK (Not Acknowledged)
CTRL v/V S_Y		SYN (Synchronous Idle)
CTRL w/W E_B		ETB (End of Transmission Block)

3.10.2 ESC Key Operations

The ESC key is another key that is always used in combination with one or more alphanumeric or special character keys to produce "escape sequence" operations. Figure 3-4 shows the various escape sequences available in the ADM-31 and the ASCII characters which are required to initiate the sequence. Escape sequences are typically initiated by the computer. When initiated from the keyboard the escape character and the desired ASCII character are transmitted to the computer. In Program Mode the escape sequence characters are also displayed on the CRT screen. Two additional keyboard initiated sequences are available:

- Press CTRL [, followed by the ASCII character appropriate to the escape sequence desired. Refer to paragraph 3.10.1 for details of CTRL key operations.
- Press SHIFT/FUNCTION, followed by the ASCII character appropriate to the escape sequence desired. Refer to paragraph 3.10.3 for details of FUNCTION key operations.

3.10.3 FUNCTION Key Operations

The FUNCTION key is also always used in combination with one or more alphanumeric or special character keys to produce ASCII codes or functions from the keyboard. These codes are typically initiated from the computer and are primarily for the convenience of the programmer. By pressing and holding or not pressing the SHIFT key prior to pressing the FUNCTION key, two entirely different functions can be produced.

The unshifted FUNCTION operation is initiated from the keyboard by pressing FUNCTION, followed by the ASCII character desired. The code produced for transmission consists of: SOH/ASCII character/CR. Ideally, the ASCII character is one which is not committed for any specific purpose until assigned by the programmer; however, any ASCII character shown in the standard graphic character set, Figure 3-5, may be used.

NOTE

The CR code here specified as the end of block character of the FUNCTION key sequence may be modified by a personality change sequence as described in paragraph 3.10.4.

	ESCAPE SEQUENCE					
HEX	2	3	4	5	6	7
0		0	@ PRINT w/o PROT	P PRINT PAGE	`	p
1	!	1	A BUFF PRNTM*	Q INSERT CHAR	a	q SET INS MODE
2	" KBD ENA	2	B SET BLOCK	R DELETE LINE	b	r CLEAR INS MODE
3	# KBD DISA	3	C SET CONV	S SEND MSG	c	s
4	$	4 SEND FG LINE	D SET DUPLH or F	T ERASE LINE PERS	d	t
5	%	5 SEND PAGE	E IN-SERT LINE	U SET PGM MODE	e	u CLEAR PGM MODE
6	& SET PROTM	6 SEND ALL LINE	F	V	f	v SET AUTO PG
7	' CLEAR PROTM	7 SEND ALL PAGE	G ATTRIB CONTROL*	W DELETE CHAR	g	w CLEAR AUTO PG
8	(CLEAR WPROT	8	H	X CLEAR PGM MODE	h	x
9	) SET WPROT	9	I BACK TAB	Y ERASE PAGE PERS	i TAB (SKIP)	y ERS PG TO NULL
A	* CLEAR ALL NULL	: CLEAR ALL NULL	J PAGE BACK	Z	j	z
B	+ CLR FG SP/PERS	; CLR FG SP/PERS	K PAGE FWD	[	k	{
C	, CLR TO PROT SP	<	L UNFORM PRNT	\	l	|
D	- LOAD PRC*	= LOAD RC*	M	]	m	}
E	. CHANGE PERS*	>	N	^	n	~
F	/ READ PRC	? READ RC	O	_	o DPLY PERS*	DEL

*Multiple Characters Required

Figure 3-4. ADM-31 Escape Sequence Characters, With HEX Coding

ESC A 1 causes data to be written into the printer buffer (page 2) and from page 2 to the printer at printer speed. Data will be lost if the buffer overflows. Meanwhile, data can be entered from the keyboard on page 1 (displayed on screen) while printing continues from page 2. CTRL t/T (DC 4) places page 2 on the screen and puts page 1 in background. This data is not lost; however, printing will stop when buffer is empty. Page 1 data may be recalled via NEW PAGE. ESC A 0 resets Buffered Print Mode.

ESC A 2 causes data to be displayed on the screen (page 1) while being written into the buffer (page 2) and then sent to the printer at print speed. If the buffer overflows data will be lost. ESC A 0 or CTRL t/T (DC 4) resets Buffered Print Mode.

- ESC S causes an FS character to be written at the cursor location. The cursor is then returned to the last previous FS or (unprotected) HOME. Transmission begins with the next character following HOME or the beginning of the next line following the first FS. Transmission stops at the last FS and the End Block character(s) is (are) written. The cursor moves to a new line. If AUTO PAGE is set, and transmission started on page 2, part or all of both pages could be transmitted. The final FS character is also transmitted.

- ESC @ causes all unprotected data on a page to be sent to the printer, with protected data sent as spaces. Trailing spaces or nulls are not transmitted, and attribute control codes are transmitted as spaces.

3.10.10 Video Attribute Control

The visual (video) attributes of the ADM-31 are generally established by the equipment design and the installation settings of DIP switches on the main PCBA. When PCBA 129870-1 (PWB 129870-3) is used, SW6, SW7, and SW8 at Switch Location A13 are applied as shown in figure 1-5. When PCBA 129870-11 (PWB 129870-9) is used, SW7 and SW8 at Switch Location A13, along with SW7 at Switch Location are applied as shown in figure 1-6. Once selected by the DIP switches, these attributes, along with others which cannot be modified, establish the standard characteristics of the video presentation, unless temporarily modified by other terminal operations.

Certain video attributes can be temporarily (dynamically) modified using keyboard-initiated or computer-initiated escape sequences. The selected modification will be only to the end of the line containing the changed attribute. If power is turned off, the video attributes revert to their standard configuaration. Dynamically establishing or changing these attributes is accomplished by keying (or commanding from the computer) "ESC G", followed by a numeral (or equivalent ASCII code) 0 through 7. The attribute change is executed and the escape sequence is written for transmission to the computer. The following video attributes can be established or altered by the indicated escape sequences:

- ESC G 0 — Reset to standard video. Used in conjunction with other video escape sequences to establish the limits of the video filed being changed.
- ESC G 1,3 — Designated areas are blanked from the display. ESC G 1(3) starts field; ESC G 0 terminates field.
- ESC G 2 — Designated areas blink in the display. ESC G 2 starts field; ESC G 0 terminates field.
- ESC G 4 — Designated areas are reversed. ESC G 4 starts field; ESC G 0 terminates field.
- ESC G 5,7 — Designated areas are reversed and blank. ESC G 5(7) starts field; ESC G 0 terminates field.
- ESC G 6 — Designated areas on reversed and blinking. ESC G 6 starts field; ESC G 0 terminates field.
- ESC G 8 — Selects alternate character generator or graphic display.